

Centro EC 200 W1

Centrifugal inline fans in plastic casings with EC-motors

• Impeller type: Centrifugal impeller with backward curved blades
• Casing material: Plastic
• Installation in any position
• Cable with mains plug

	Unit of measurement	Centro EC 200 W1
Phases	-	1
Maximum supply voltage	V	230
Minimum supply voltage	V	230
Power supply frequency	Hz	50/60
Maximum airflow	m³/h	885
Weight	kg	3
Transported air temperature (max)	°C	60
Transported air temperature (min)	°C	-25
Ingress protection rating	-	IPX4
Ingress protection rating of the drive	-	IP55
Impeller material	-	Plastic

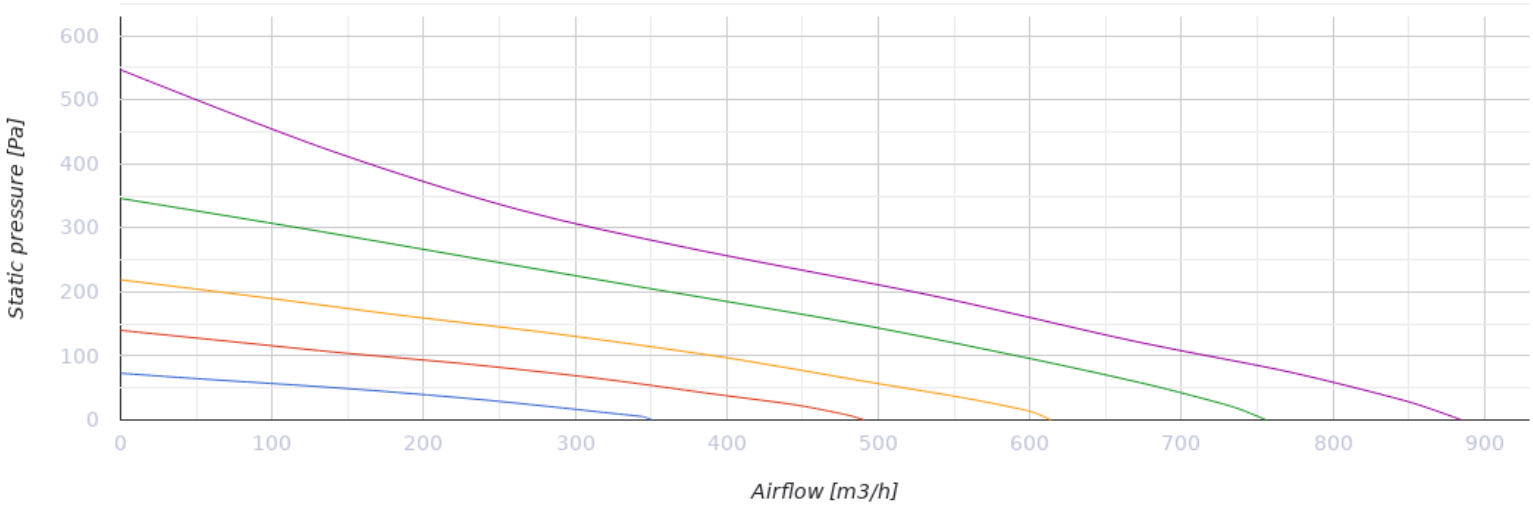

Dimensions

ØD	ØD1	B	L	L1	L2	L3
200	340	354	276	30	30	30

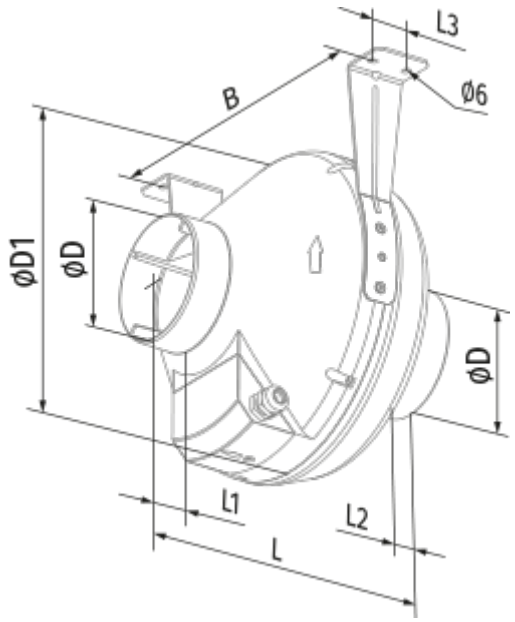

Accessories

EC motors regulators

Name	Photo	Description

CDT E/0-10		Speed control for EC motors