

Centro EC 150

Centrifugal inline fans in plastic casings with EC-motors

• Impeller type: Centrifugal impeller with backward curved blades
• Casing material: Plastic
• Installation in any position

	Unit of measurement	Centro EC 150
Phases	-	1
Minimum supply voltage	V	230
Maximum supply voltage	V	230
Power supply frequency	Hz	50/60
Maximum airflow	m³/h	630
Weight	kg	2.5
Transported air temperature (max)	°C	60
Transported air temperature (min)	°C	-25
Ingress protection rating	-	IPX4
Ingress protection rating of the drive	-	IP55
Impeller material	-	Plastic

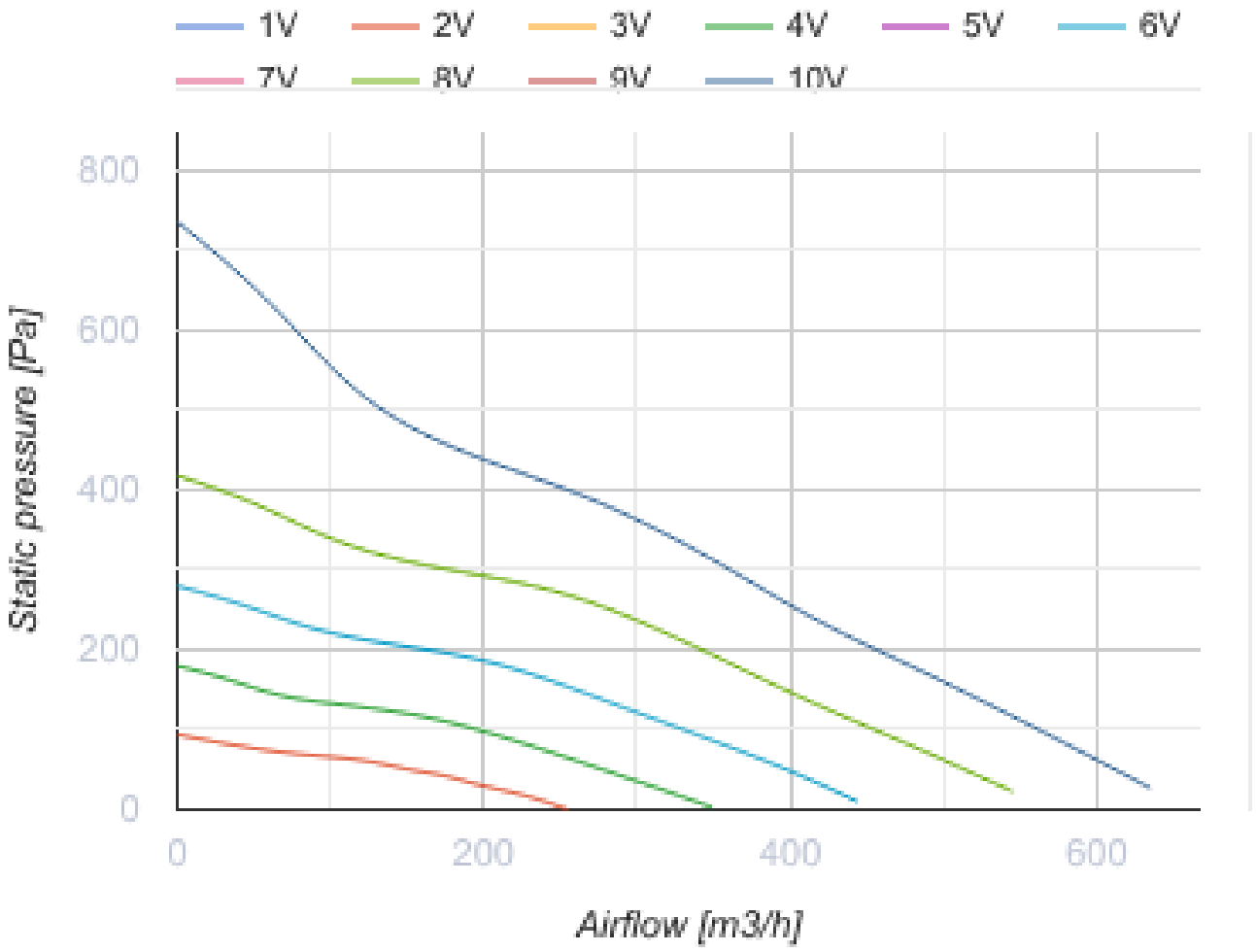
1V
2V
3V
4V
5V
6V
7V
8V
9V
10V
800
600
400
200
0
Static pressure [Pa]
0
200
400
600
Airflow [m3/h]

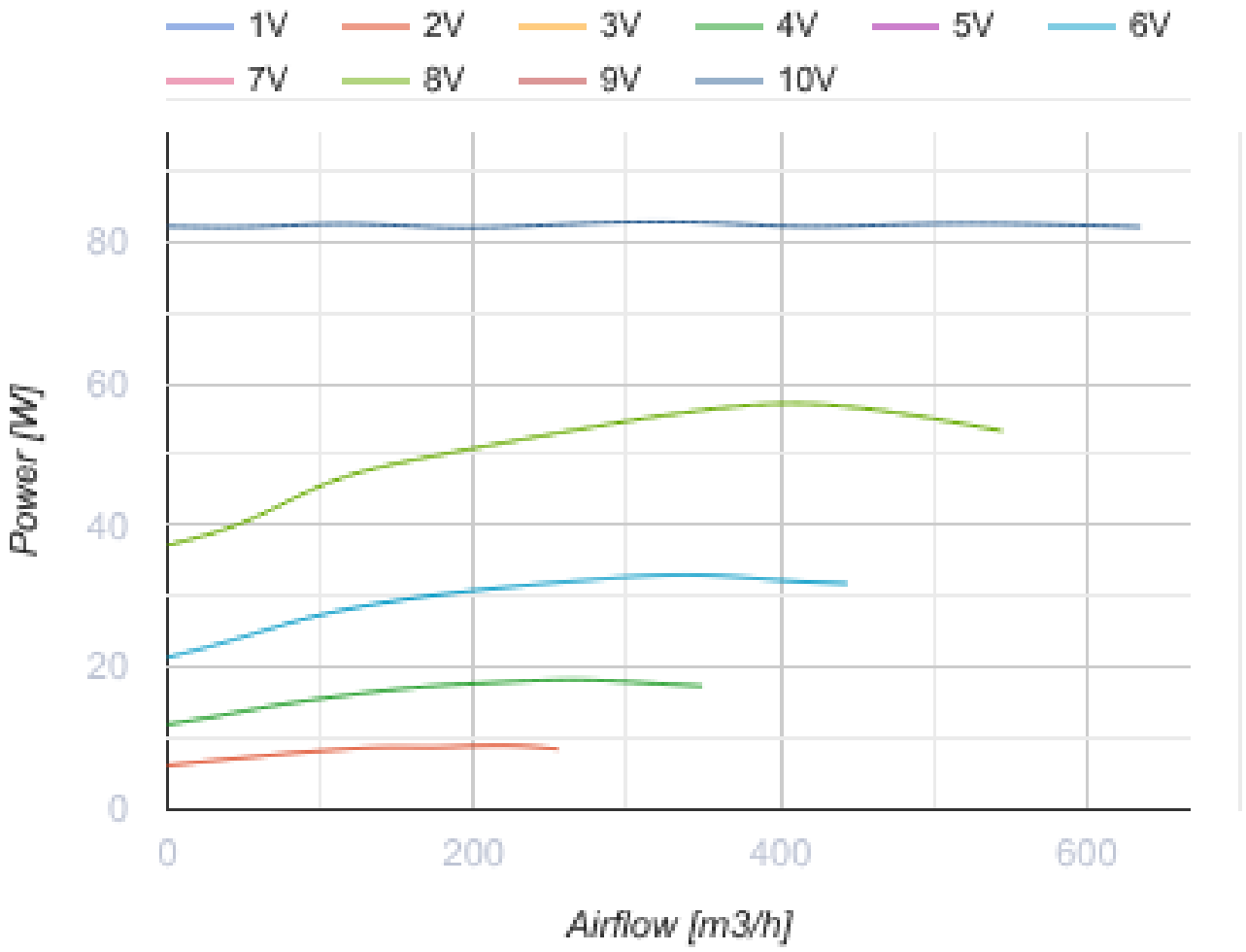

Dimensions

ØD	ØD1	B	L	L1	L2	L3
150/160	300	310	286	30	30	30

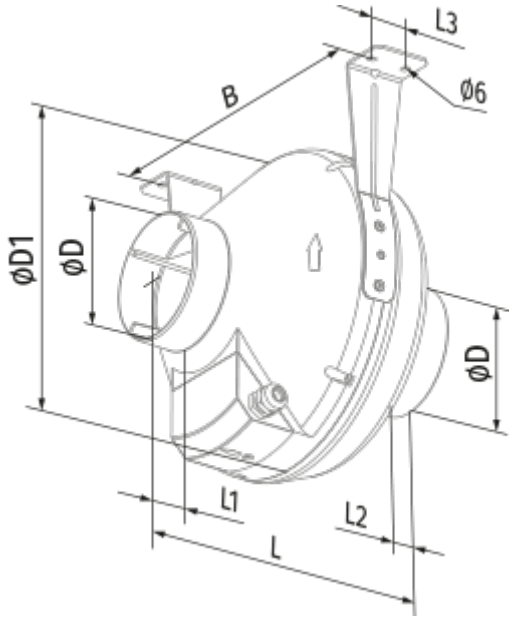
L3
B
Ø6
ØD1
ØD
ØD
L1
L2
L

Ecodesign

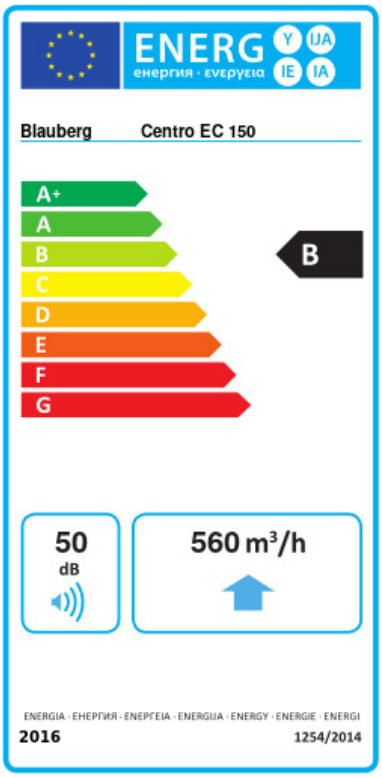

Trademark	Blauberg					
Model	Centro EC 150					
Specific energy consumption (SEC) (kWh/(m²/a))	Cold		Average		Warm	
	-54.3	A+	-27.2	B	-11.7	E
Type of ventilation unit	Unidirectional					
Type of drive installed	Variable speed					
Type of heat recovery system	None					
Maximum flow rate (m³/h)	560					
Electric power input (W)	82					
Reference flow rate (m³/s)	0.108					
Reference pressure difference (Pa)	50					
Specific power input (SPI) (W/(m³/h))	0.082					
Control typology	Local demand control					
Maximum external leakage rates (%)	2.7					
Sound power level (dB(A))	50					
Declared typology	RVU UVU					
The annual electricity consumption (AEC) (kWh/a)	Cold		Average		Warm	
	43		43		43	
The annual heating saved (AHS) (kWh/a)	Cold		Average		Warm	
	5536		2830		1280	

Accessories

EC motors regulators

Name	Photo	Description
CDT E/0-10		Speed control for EC motors