

# Centro EC 100 G1

Centrifugal inline fans in plastic casings with EC-motors

• Control: Built-in speed controller
• Impeller type: Centrifugal impeller with backward curved blades
• Casing material: Plastic
• Installation in any position
• Cable with mains plug
• Temperature sensor: Built-in

| | Unit of measurement | Centro EC 100 G1 |
|---|---|---|
| Phases | - | 1 |
| Maximum supply voltage | V | 230 |
| Minimum supply voltage | V | 230 |
| Power supply frequency | Hz | 50/60 |
| Maximum airflow | m³/h | 340 |
| Weight | kg | 2 |
| Transported air temperature (max) | °C | 60 |
| Transported air temperature (min) | °C | -25 |
| Ingress protection rating | - | IPX4 |
| Ingress protection rating of the drive | - | IP55 |
| Impeller material | - | Plastic |

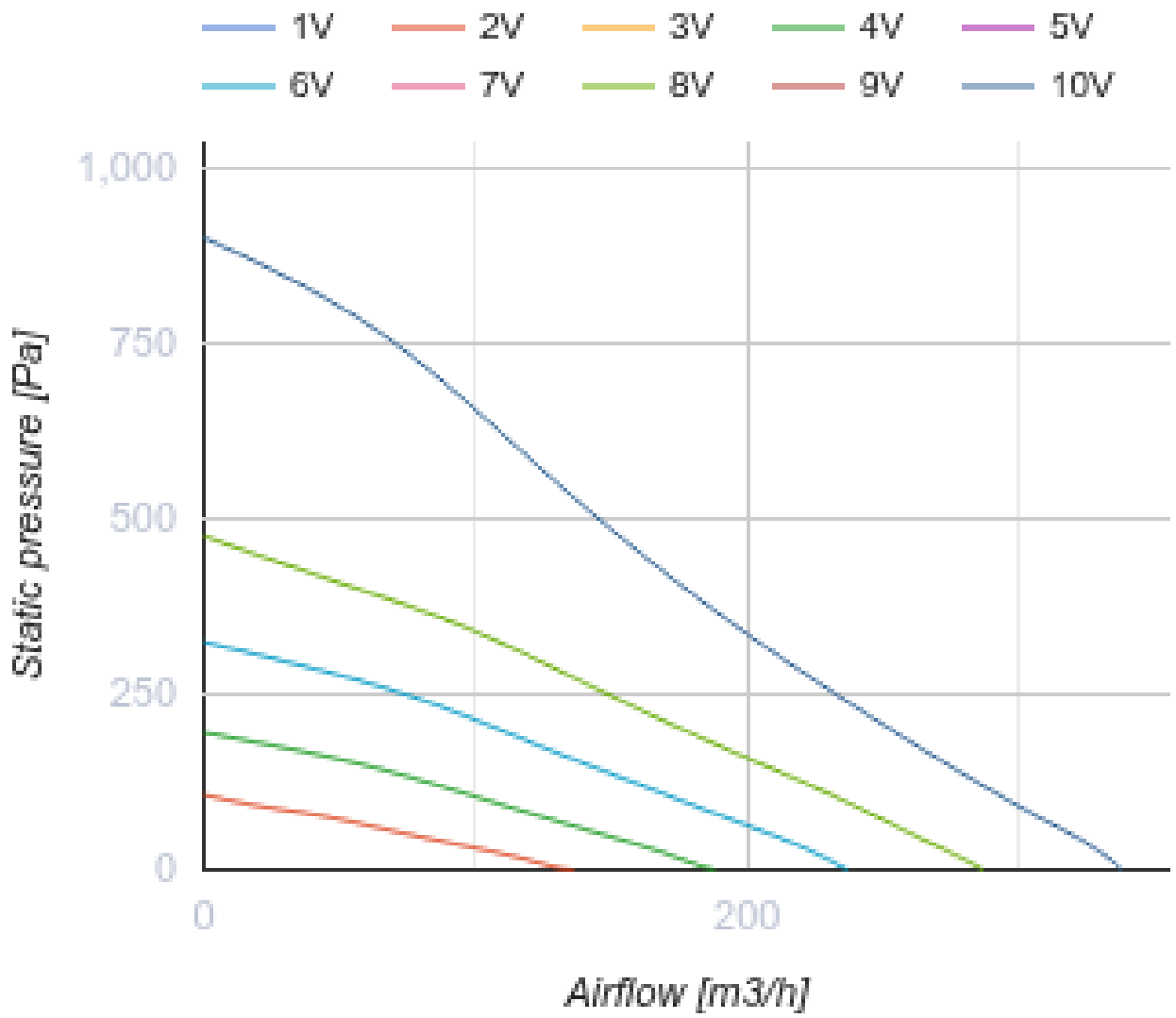
1V
2V
3V
4V
5V
6V
7V
8V
9V
10V
1,000
750
500
250
0
Static pressure [Pa]
0
200
Airflow [m3/h]

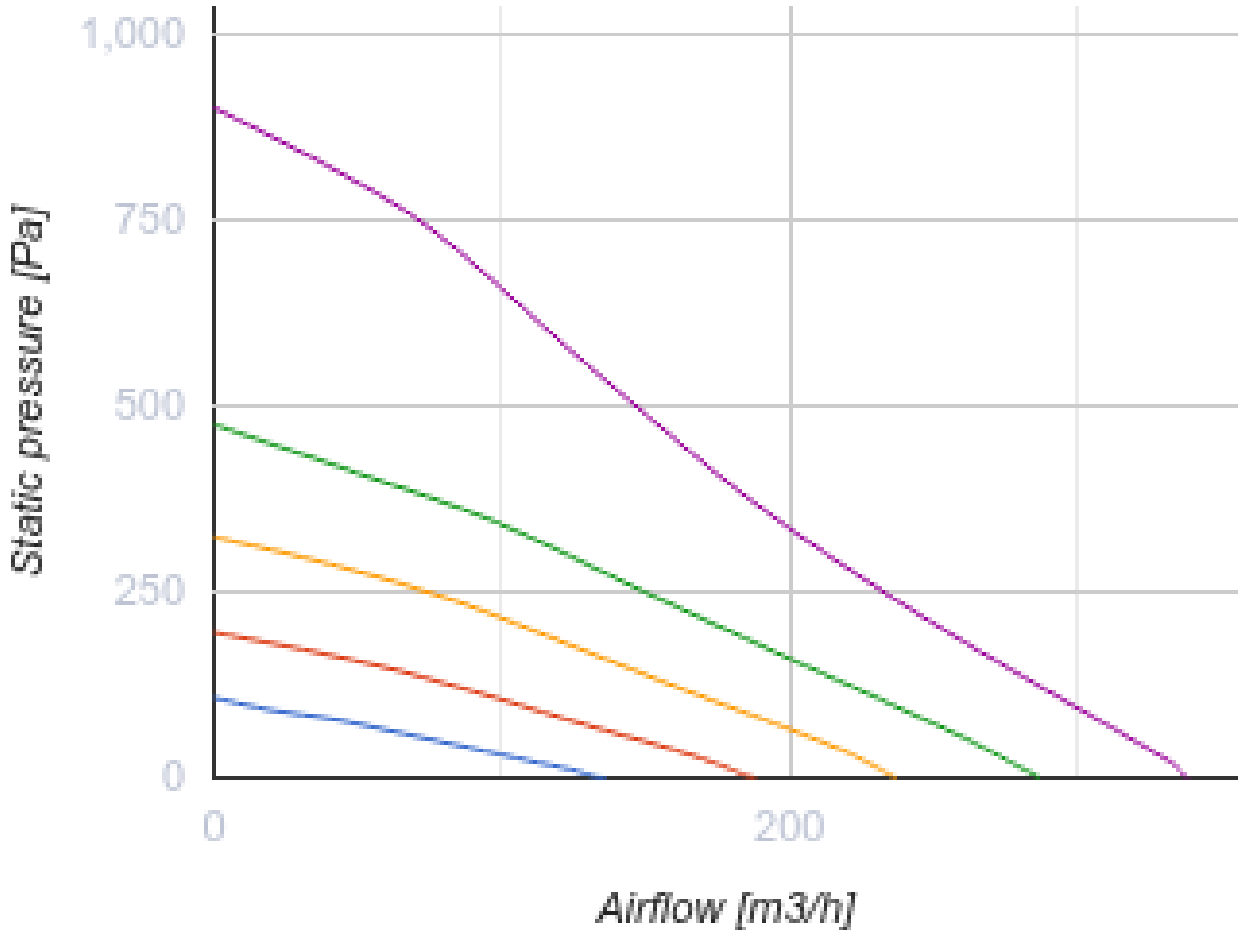
1,000
750
500
250
0
Static pressure [Pa]
0
200
Airflow [m3/h]

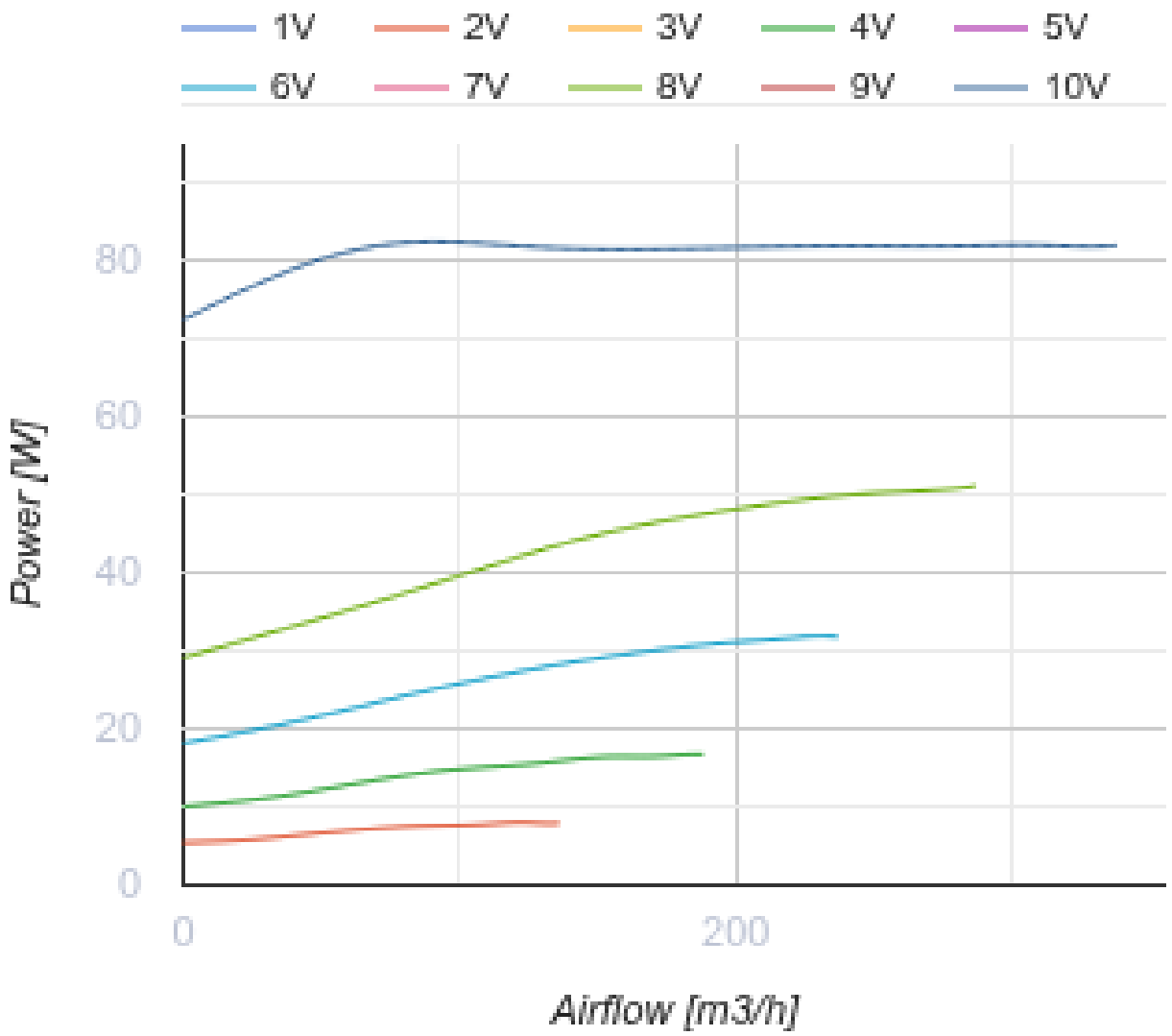


## Dimensions

| ØD | ØD1 | B | L | L1 | L2 | L3 |
|---|---|---|---|---|---|---|
| 100 | 250 | 270 | 230 | 30 | 27 | 30 |

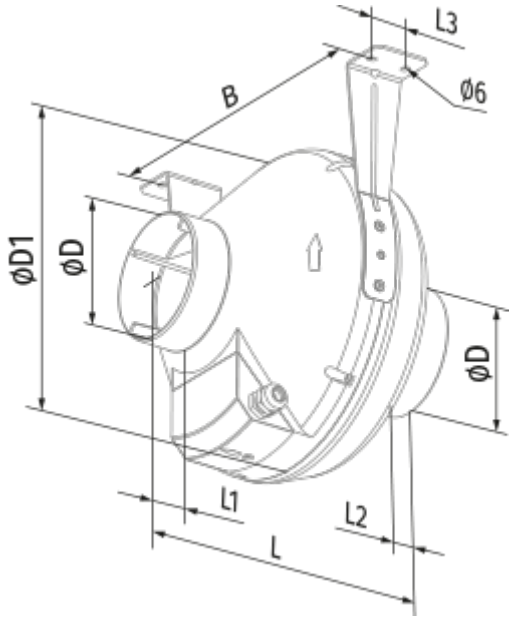
L3
B
Ø6
ØD1
ØD
ØD
L1
L2
L

## Ecodesign

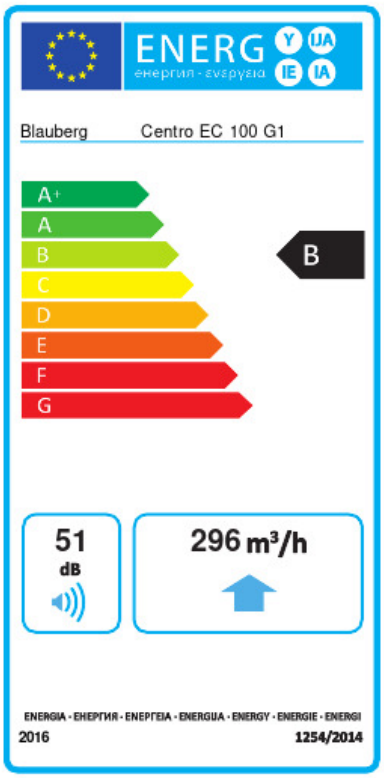


| Trademark | Blauberg | | | | | |
|---|---|---|---|---|---|---|
| Model | Centro EC 100 G1 | | | | | |
| Specific energy consumption (SEC) (kWh/(m²/a)) | Cold | | Average | | Warm | |
| | -53.5 | A+ | -26.4 | B | -10.9 | E |
| Type of ventilation unit | Unidirectional | | | | | |
| Type of drive installed | Variable speed | | | | | |
| Type of heat recovery system | None | | | | | |
| Maximum flow rate (m³/h) | 296 | | | | | |
| Electric power input (W) | 82 | | | | | |
| Reference flow rate (m³/s) | 0.058 | | | | | |
| Reference pressure difference (Pa) | 50 | | | | | |
| Specific power input (SPI) (W/(m³/h)) | 0.143 | | | | | |
| Control typology | Local demand control | | | | | |
| Maximum external leakage rates (%) | 2.7 | | | | | |
| Sound power level (dB(A)) | 51 | | | | | |
| Declared typology | RVU UVU | | | | | |
| The annual electricity consumption (AEC) (kWh/a) | Cold | | Average | | Warm | |
| | 76 | | 76 | | 76 | |
| The annual heating saved (AHS) (kWh/a) | Cold | | Average | | Warm | |
| | 5536 | | 2830 | | 1280 | |

## Accessories

### EC motors regulators

| Name | Photo | Description |
|---|---|---|
| CDT E/0-10 |  | Speed control for EC motors |