

Centro EC 100 FR1

Centrifugal inline fans in plastic casings with EC-motors

• Control: Built-in speed controller
• Impeller type: Centrifugal impeller with backward curved blades
• Casing material: Plastic
• Installation in any position
• Cable with mains plug

	Unit of measurement	Centro EC 100 FR1
Phases	-	1
Maximum supply voltage	V	230
Minimum supply voltage	V	230
Power supply frequency	Hz	50/60
Maximum airflow	m^3/h	340
Weight	kg	2
Transported air temperature (max)	°C	60
Transported air temperature (min)	°C	-25
Ingress protection rating	-	IPX4
Ingress protection rating of the drive	-	IP55
Impeller material	-	Plastic

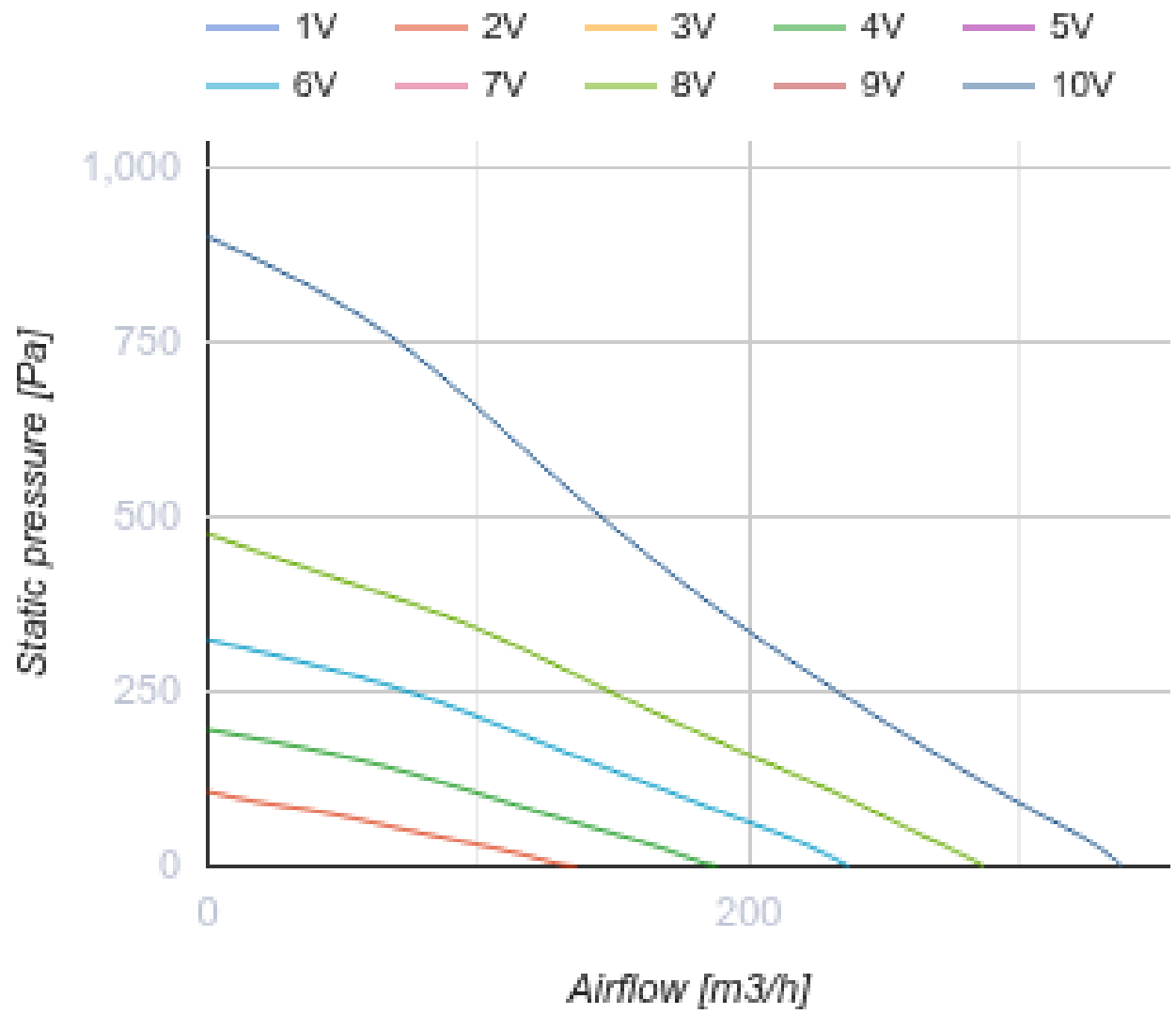
1V
2V
3V
4V
5V
6V
7V
8V
9V
10V
1,000
750
500
250
0
Static pressure [Pa]
0
200
Airflow [m3/h]

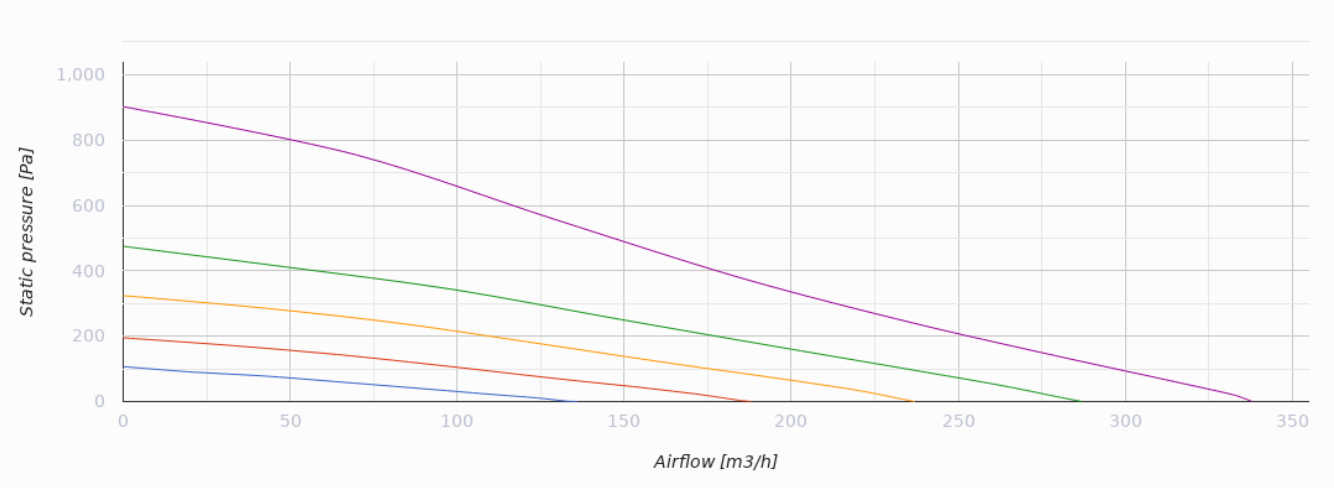
1,000
800
600
400
200
0
Static pressure [Pa]
0
50
100
150
200
250
300
350
Airflow [m3/h]

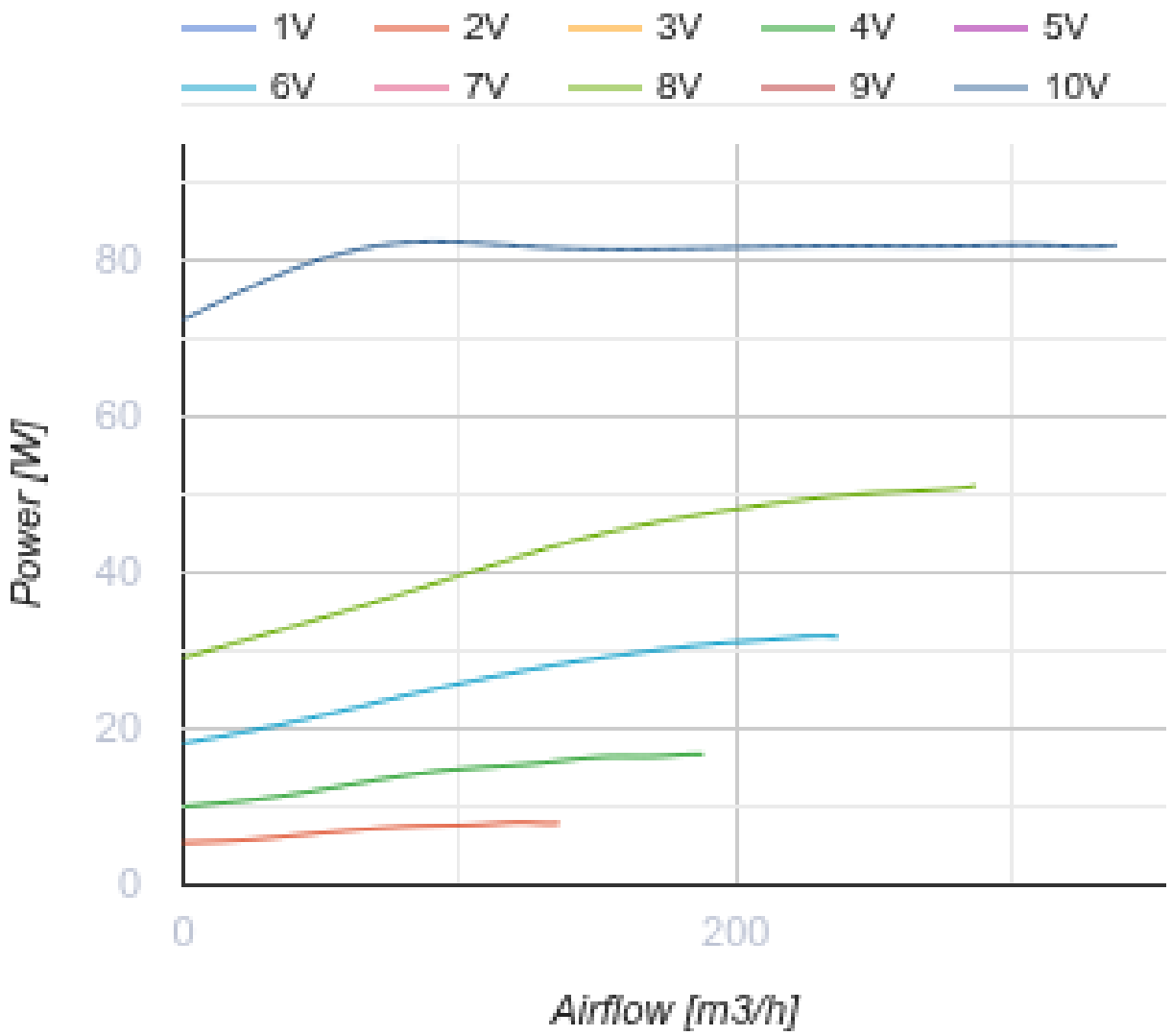

Dimensions

ØD	ØD1	B	L	L1	L2	L3
100	250	270	230	30	27	30

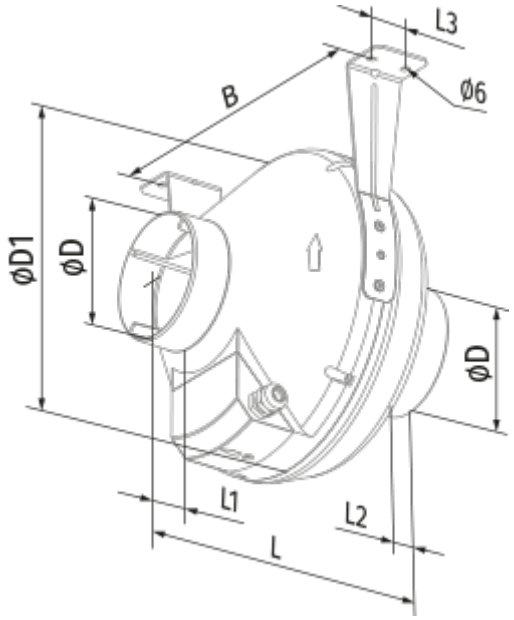
L3
B
Ø6
ØD1
ØD
ØD
L1
L2
L

Ecodesign

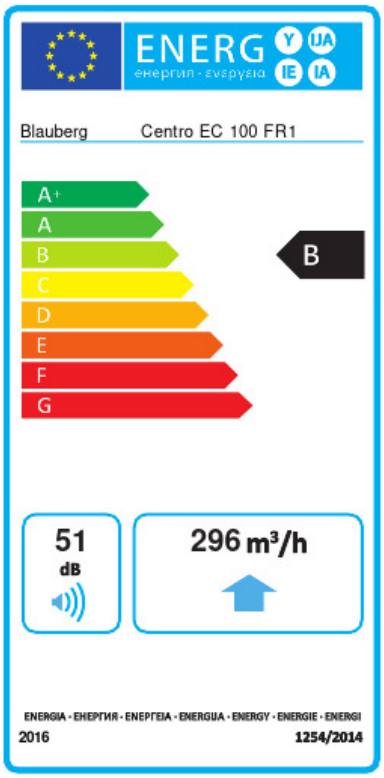

Trademark	Blauberg					
Model	Centro EC 100 FR1					
Specific energy consumption (SEC) (kWh/(m²/a))	Cold		Average		Warm	
	-53.5	A+	-26.4	B	-10.9	E
Type of ventilation unit	Unidirectional					
Type of drive installed	Variable speed					
Type of heat recovery system	None					
Maximum flow rate (m³/h)	296					
Electric power input (W)	82					
Reference flow rate (m³/s)	0.058					
Reference pressure difference (Pa)	50					
Specific power input (SPI) (W/(m³/h))	0.143					
Control typology	Local demand control					
Maximum external leakage rates (%)	2.7					
Sound power level (dB(A))	51					
Declared typology	RVU UVU					
The annual electricity consumption (AEC) (kWh/a)	Cold		Average		Warm	
	76		76		76	
The annual heating saved (AHS) (kWh/a)	Cold		Average		Warm	
	5536		2830		1280	

Accessories

EC motors regulators

Name	Photo	Description
CDT E/0-10		Speed control for EC motors