

Centro 315 V2

Centrifugal inline fans in plastic casings

• Impeller type: Centrifugal impeller with backward curved blades
• Casing material: Polypropylene
• Installation in any position

	Unit of measurement	Centro 315 V2	
Speed	-	1	2
Phases	-	1	
Maximum supply voltage	V	230	
Minimum supply voltage	V	230	
Power supply frequency	Hz	50	
Maximum airflow	m³/h	758	1268
Weight	kg	4.85	
Transported air temperature (max)	°C	55	
Transported air temperature (min)	°C	-25	
Ingress protection rating	-	IPX4	
Ingress protection rating of the drive	-	IP44	
Impeller material	-	Plastic	

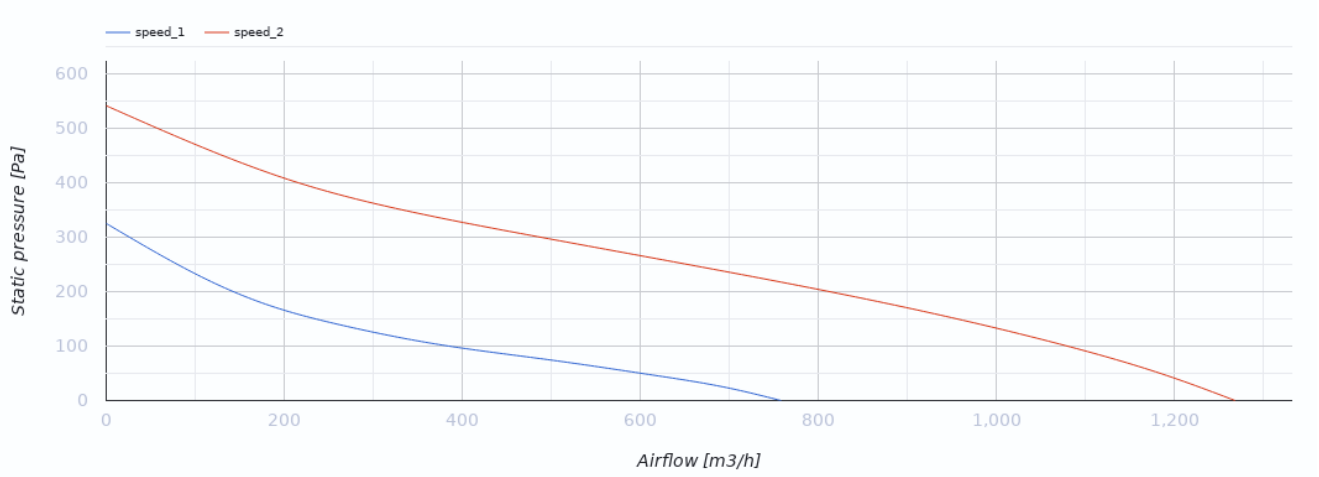

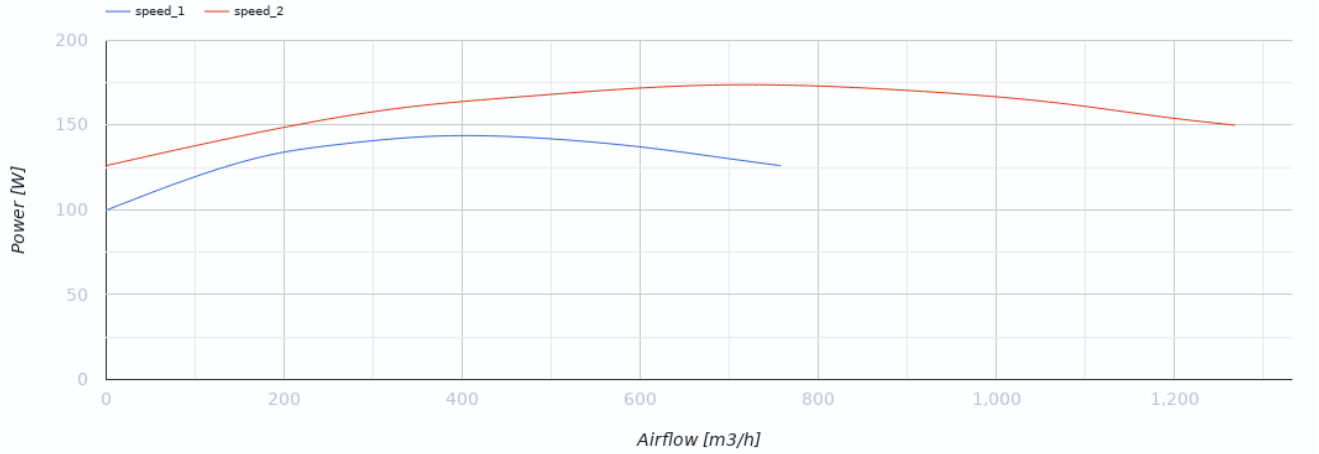

Dimensions

Ø D	Ø D1	B	L	L1	L2	L3
315	400	414	276	40	55	40

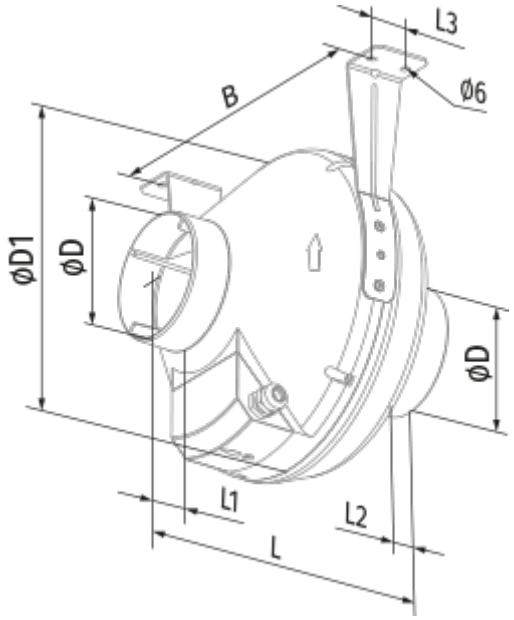

Accessories

For round ducts

Name	Photo	Description
SD 315/600		Silencers for round ducts
SD 315/900		Silencers for round ducts
SD 315/1200		Silencers for round ducts

For round ducts

Name	Photo	Description
KFBK 315		Filter boxes for round ducts
KFBT 315 G4		Filter boxes with pocket filters for round ducts
KFBT 315 F5		Filter boxes with pocket filters for round ducts

KFBT 315 F7		Filter boxes with pocket filters for round ducts

For round ducts

Name	Photo	Description
VRV 315		Backdraft dampers with spring for round ducts
VKA 315		Air dampers for round ducts

Water heaters

Name	Photo	Description
WKH 315-2		Duct water heaters for round ducts
WKH 315-4		Duct water heaters for round ducts

Electrical heaters

Name	Photo	Description
EKH 315-1.2		Duct electrical heaters for round ducts
EKH 315-2.0		Duct electrical heaters for round ducts
EKH 315-2.4		Duct electrical heaters for round ducts

Speed control switches

Name	Photo	Description
CDP-2/5		Multi-speed switch

CDP-2/10		Multi-speed switch