

Centro 315 max FR1

Centrifugal inline fans in plastic casings

• Control: Built-in speed controller
• Impeller type: Centrifugal impeller with backward curved blades
• Casing material: Polypropylene
• Installation in any position
• Cable with mains plug

	Unit of measurement	Centro 315 max FR1
Phases	-	1
Maximum supply voltage	V	230
Minimum supply voltage	V	230
Power supply frequency	Hz	50
Maximum airflow	m³/h	1700
Weight	kg	4.85
Transported air temperature (max)	°C	45
Transported air temperature (min)	°C	-25
Ingress protection rating	-	IPX4
Ingress protection rating of the drive	-	IP44
Impeller material	-	Plastic

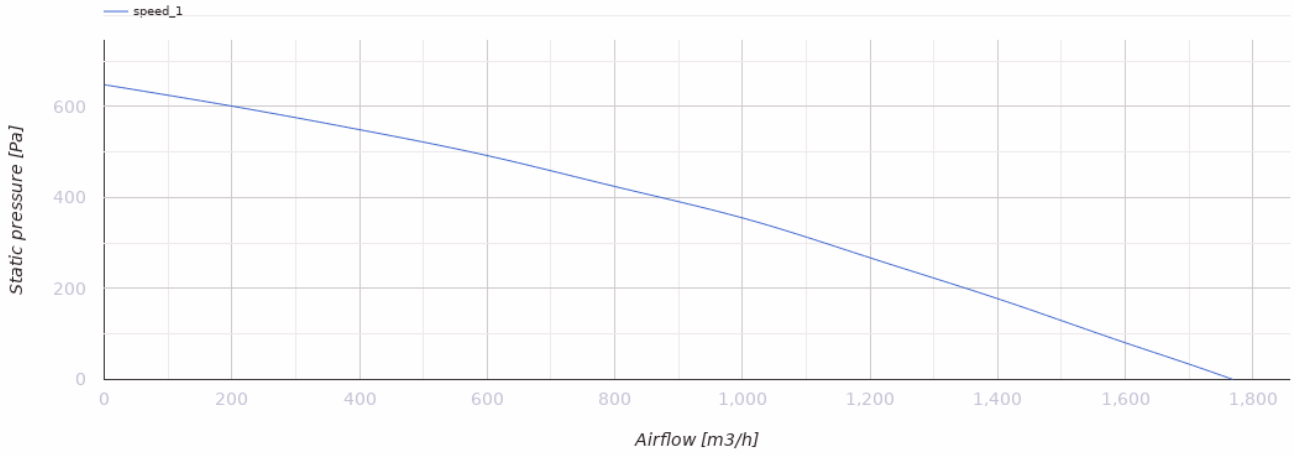

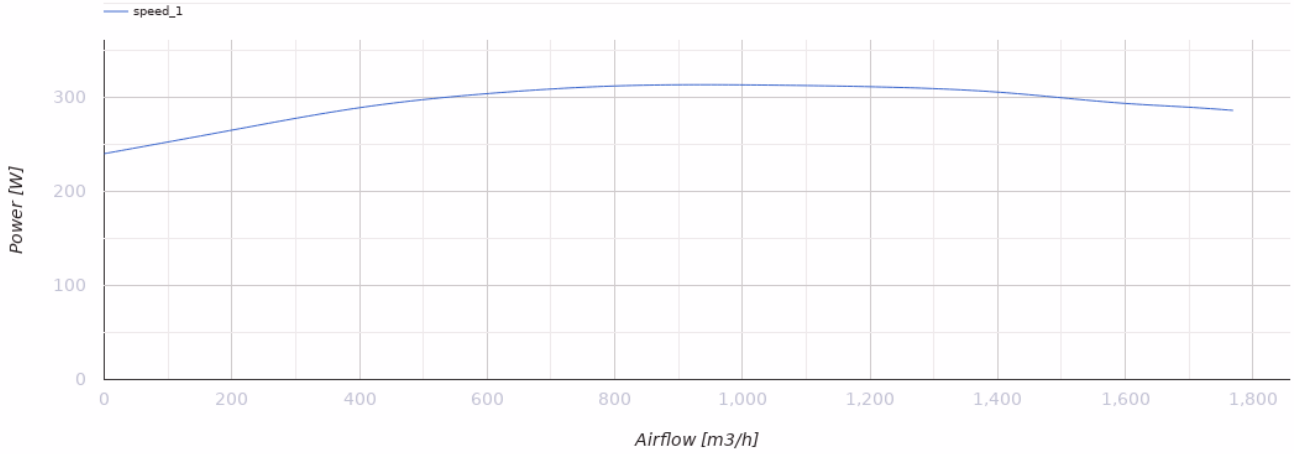

Dimensions

ØD	ØD1	B	L	L1	L2	L3
315	400	414	276	40	55	40

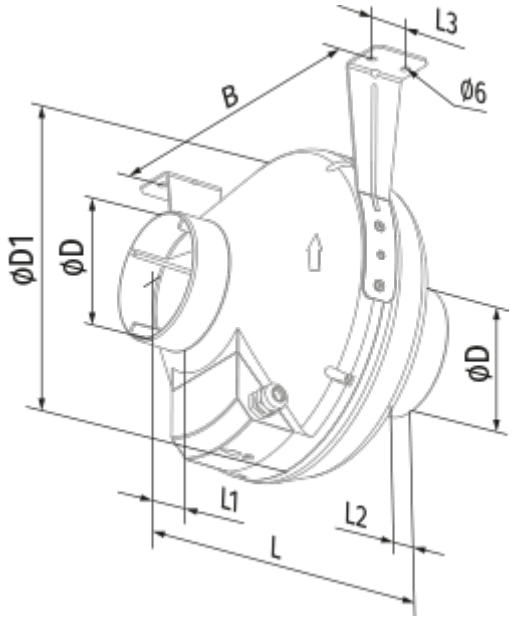
L3
B
Ø6
ØD1
ØD
ØD
L1
L2
L

Ecodesign

Trademark	Blauberg
Model	Centro 315 max FR1
Type of ventilation unit	Unidirectional
Type of drive installed	External MSD or VSD
Type of heat recovery system	None
Nominal external pressure (Pa)	283
Maximum external leakage rates (%)	2.7
Static efficiency (%)	30.3
Sound power level (dB(A))	73
Effective electric power input (kW)	0.307
Declared typology	NRVU UVU

Accessories

For round ducts

Name	Photo	Description
SD 315/600		Silencers for round ducts
SD 315/900		Silencers for round ducts
SD 315/1200		Silencers for round ducts

For round ducts

Name	Photo	Description
KFBK 315		Filter boxes for round ducts
KFBT 315 G4	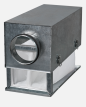	Filter boxes with pocket filters for round ducts

KFBT 315 F5		Filter boxes with pocket filters for round ducts
KFBT 315 F7		Filter boxes with pocket filters for round ducts

For round ducts

Name	Photo	Description
VRV 315		Backdraft dampers with spring for round ducts
VKA 315		Air dampers for round ducts

Water heaters

Name	Photo	Description
WKH 315-2		Duct water heaters for round ducts
WKH 315-4		Duct water heaters for round ducts

Electrical heaters

Name	Photo	Description
EKH 315-1.2		Duct electrical heaters for round ducts
EKH 315-2.0		Duct electrical heaters for round ducts
EKH 315-2.4		Duct electrical heaters for round ducts

Speed controllers

Name	Photo	Description
CDT E1.8		Thyristor speed controller

CDT1 E1.5		Multi-speed switches