

Centro 315

Centrifugal inline fans in plastic casings

• Impeller type: Centrifugal impeller with backward curved blades
• Casing material: Polypropylene
• Installation in any position

	Unit of measurement	Centro 315	
Phases	-	1	
Minimum supply voltage	V	230	
Maximum supply voltage	V	230	
Power supply frequency	Hz	50	60
Maximum airflow	m³/h	1240	
Weight	kg	4.85	
Transported air temperature (max)	°C	50	
Transported air temperature (min)	°C	-25	
Ingress protection rating	-	IPX4	
Ingress protection rating of the drive	-	IP44	
Impeller material	-	Plastic	

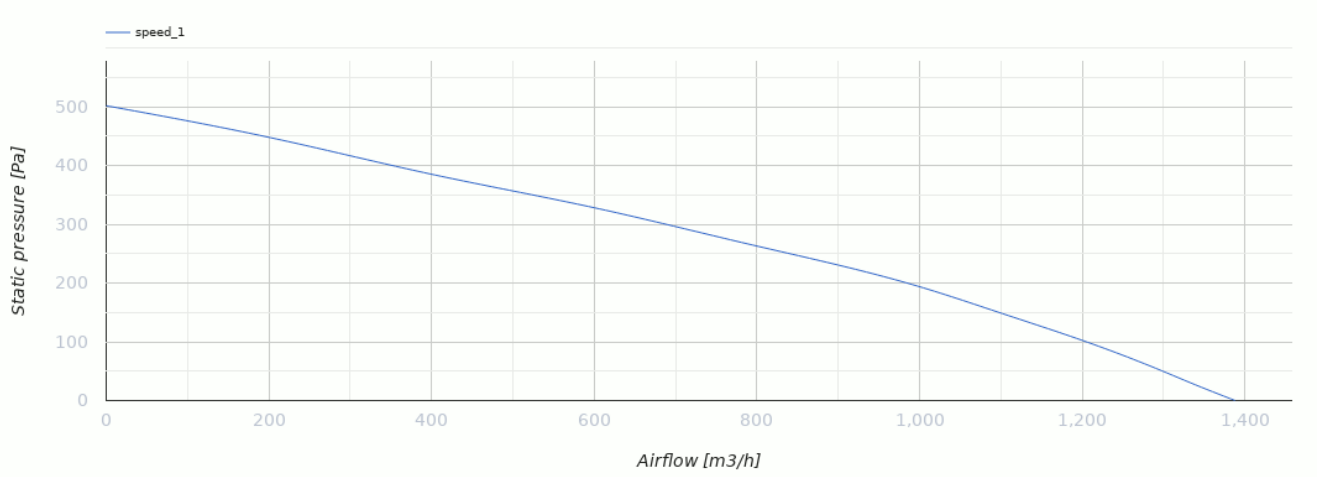

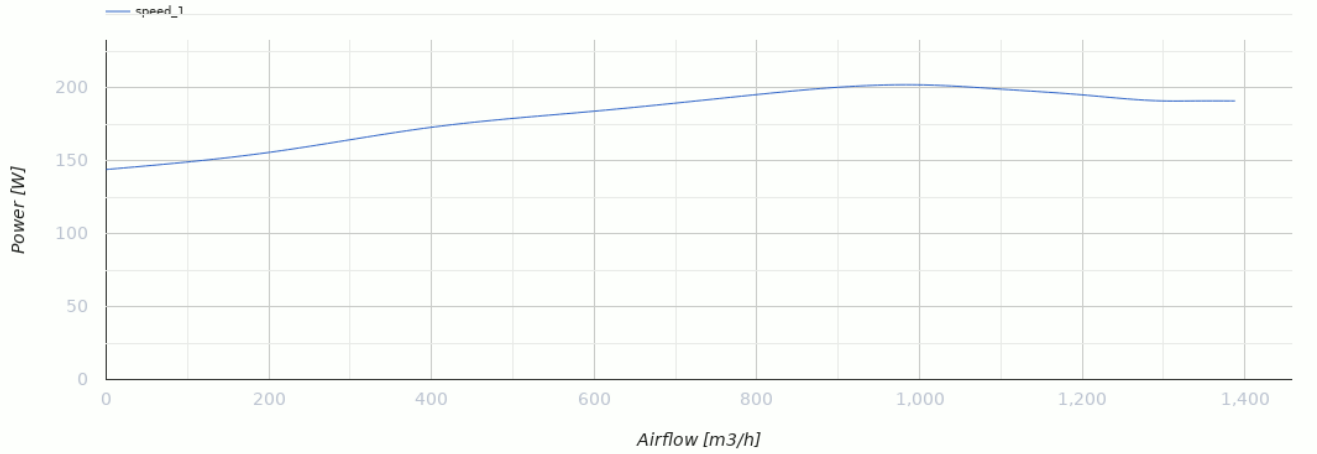

Dimensions

ØD	ØD1	B	L	L1	L2	L3
315	400	414	276	40	55	40

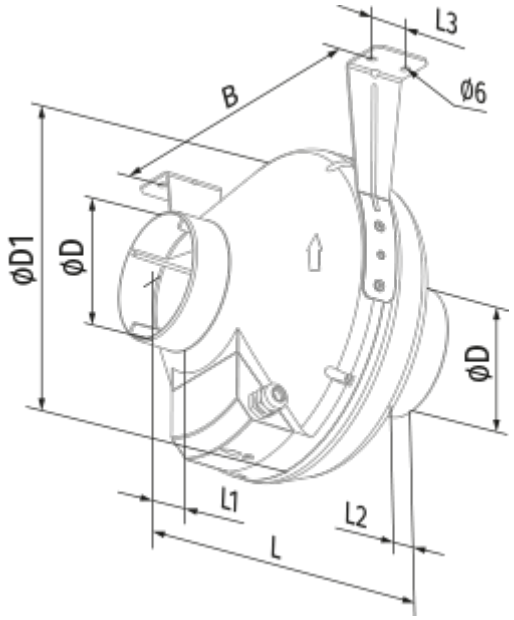
L3
B
Ø6
ØD1
ØD
ØD
L1
L2
L

Ecodesign

Trademark	Blauberg					
Model	Centro 315					
Specific energy consumption (SEC) (kWh/(m²/a))	Cold		Average		Warm	
	-53.3	A+	-26.2	B	-10.7	E
Type of ventilation unit	Unidirectional					
Type of drive installed	External MSD or VSD					
Type of heat recovery system	None					
Maximum flow rate (m³/h)	1010					
Electric power input (W)	160					
Reference flow rate (m³/s)	0.196					
Reference pressure difference (Pa)	50					
Nominal external pressure (Pa)	237					
Specific power input (SPI) (W/(m³/h))	0.158					
Control typology	Local demand control					
Maximum external leakage rates (%)	2.7					
Static efficiency (%)	30.2					
Declared typology	NRVU UVU					
Effective electric power input (kW)	0.194					
Sound power level (dB(A))	69					
The annual electricity consumption (AEC) (kWh/a)	Cold		Average		Warm	
	84		84		84	
The annual heating saved (AHS) (kWh/a)	Cold		Average		Warm	
	5536		2830		1280	

Accessories

For round ducts

Name	Photo	Description
SD 315/600		Silencers for round ducts
SD 315/900		Silencers for round ducts

SD 315/1200		Silencers for round ducts

For round ducts

Name	Photo	Description
KFBK 315		Filter boxes for round ducts
KFBT 315 G4		Filter boxes with pocket filters for round ducts
KFBT 315 F5		Filter boxes with pocket filters for round ducts
KFBT 315 F7		Filter boxes with pocket filters for round ducts

For round ducts

Name	Photo	Description
VRV 315		Backdraft dampers with spring for round ducts
VKA 315		Air dampers for round ducts

Water heaters

Name	Photo	Description
WKH 315-2		Duct water heaters for round ducts
WKH 315-4		Duct water heaters for round ducts

Electrical heaters

Name	Photo	Description
EKH 315-1.2		Duct electrical heaters for round ducts

EKH 315-2.0		Duct electrical heaters for round ducts
EKH 315-2.4		Duct electrical heaters for round ducts

Speed controllers

Name	Photo	Description
CDT E1.8		Thyristor speed controller
CDT1 E1.5		Multi-speed switches