

Centro 250 G1

Centrifugal inline fans in plastic casings

• Control: Built-in speed controller
• Impeller type: Centrifugal impeller with backward curved blades
• Casing material: Polypropylene
• Installation in any position
• Cable with mains plug
• Temperature sensor: Built-in

	Unit of measurement	Centro 250 G1	
Phases	-	1	
Minimum supply voltage	V	230	
Maximum supply voltage	V	230	
Power supply frequency	Hz	50	60
Maximum airflow	m³/h	1100	
Weight	kg	4.3	
Transported air temperature (max)	°C	50	
Transported air temperature (min)	°C	-25	
Ingress protection rating	-	IPX4	
Ingress protection rating of the drive	-	IP44	
Impeller material	-	Plastic	

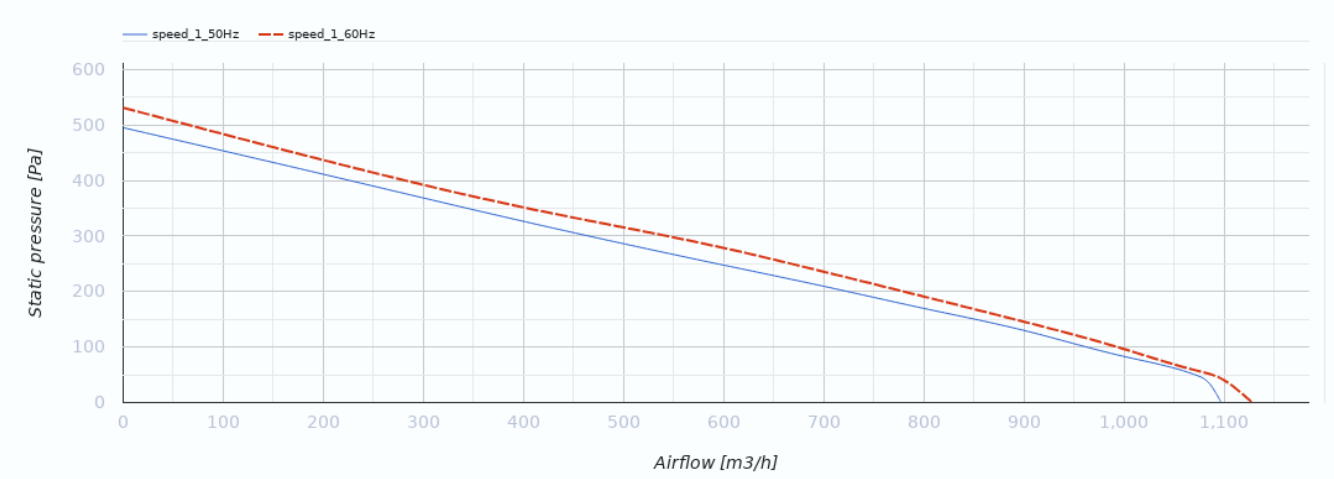

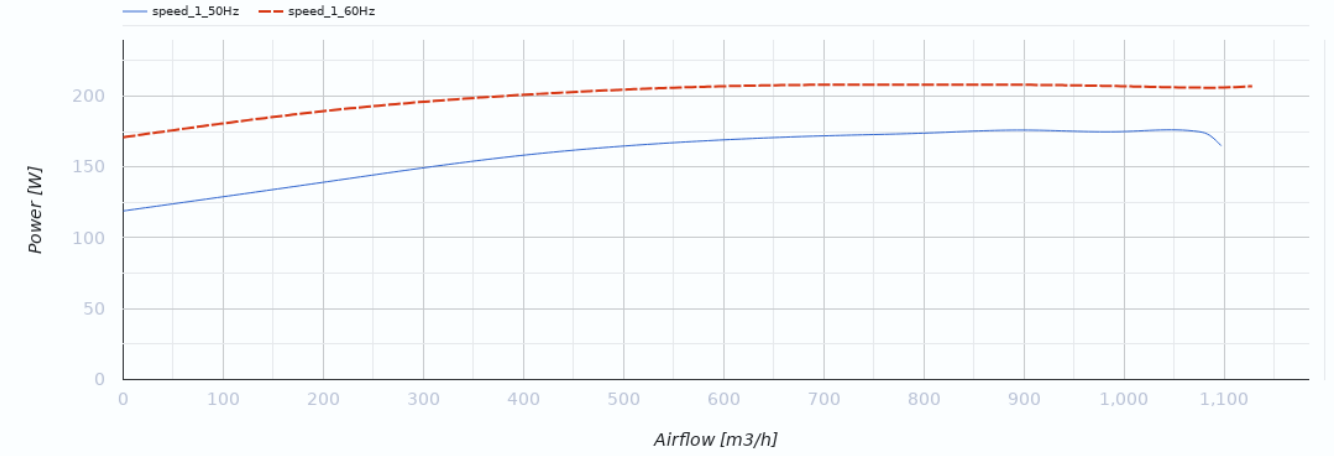

Dimensions

ØD	ØD1	B	L	L1	L2	L3
250	340	354	265	30	30	40

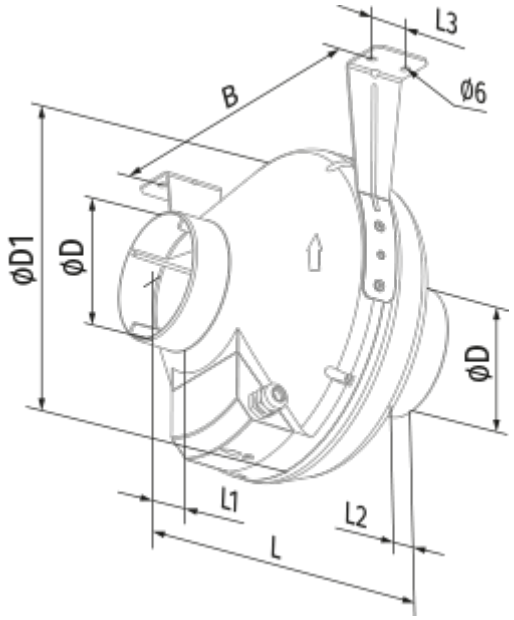
L3
B
Ø6
ØD1
ØD
ØD
L1
L2
L

Ecodesign

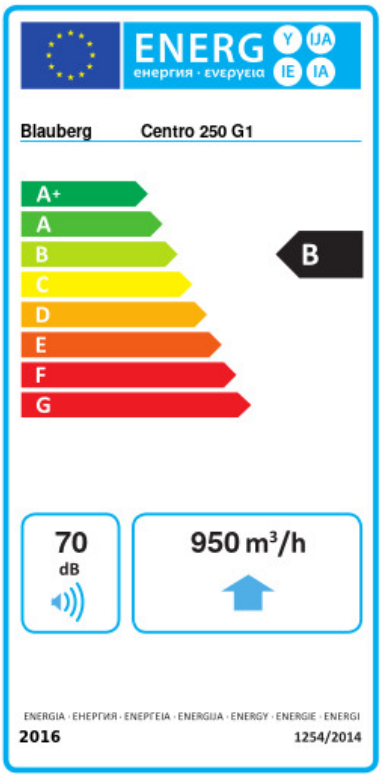

Trademark	Blauberg					
Model	Centro 250 G1					
Specific energy consumption (SEC) (kWh/(m²/a))	Cold		Average		Warm	
	-53.1	A+	-26	B	-10.5	E
Type of ventilation unit	Unidirectional					
Type of drive installed	Variable speed					
Type of heat recovery system	None					
Maximum flow rate (m³/h)	880					
Electric power input (W)	169					
Reference flow rate (m³/s)	0.171					
Reference pressure difference (Pa)	50					
Specific power input (SPI) (W/(m³/h))	0.17					
Control typology	Local demand control					
Maximum external leakage rates (%)	2.7					
Declared typology	RVU UVU					
Sound power level (dB(A))	69					
The annual electricity consumption (AEC) (kWh/a)	Cold		Average		Warm	
	90		90		90	
The annual heating saved (AHS) (kWh/a)	Cold		Average		Warm	
	5536		2830		1280	

Accessories

For round ducts

Name	Photo	Description
SD 250/600		Silencers for round ducts
SD 250/900		Silencers for round ducts
SD 250/1200		Silencers for round ducts

For round ducts

Name	Photo	Description
KFBK 250		Filter boxes for round ducts
KFBT 250 G4	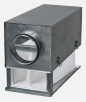	Filter boxes with pocket filters for round ducts
KFBT 250 F5		Filter boxes with pocket filters for round ducts
KFBT 250 F7		Filter boxes with pocket filters for round ducts

For round ducts

Name	Photo	Description
VRV 250		Backdraft dampers with spring for round ducts
VKA 250		Air dampers for round ducts

Water heaters

Name	Photo	Description
WKH 250-2		Duct water heaters for round ducts
WKH 250-4		Duct water heaters for round ducts

Electrical heaters

Name	Photo	Description
EKH 250-1.2		Duct electrical heaters for round ducts
EKH 250-2.0		Duct electrical heaters for round ducts

EKH 250-2.4		Duct electrical heaters for round ducts
EKH 250-3.0		Duct electrical heaters for round ducts

Speed controllers

Name	Photo	Description
CDT E1.8		Thyristor speed controller
CDT1 E1.5		Multi-speed switches