

# Ceileo DC 150 Light

Centrifugal extract low-noise and low-watt fans for ceiling mounting

• Lighting
• Impeller type: Centrifugal impeller with forward curved blades
• Casing material: Galvanized steel
• Backdraft protection: Backdraft damper

| | Unit of measurement | Ceileo DC 150 Light |
|---|---|---|
| Minimum supply voltage | V | 120 |
| Maximum supply voltage | V | 240 |
| Power supply frequency | Hz | 50/60 |
| Maximum airflow | m³/h | 254 |
| Weight | kg | 6.2 |
| Ambient air temperature min | °C | 1 |
| Ambient air temperature max | °C | 40 |
| Ingress protection rating | - | IPX2 |

## Dimensions

| ∅ D | L1 | A | B | C | E | H | h | a | b |
|---|---|---|---|---|---|---|---|---|---|
| 149 | 50 | 330 | 258 | 260 | 395 | 188 | 62 | 208 | 123 |

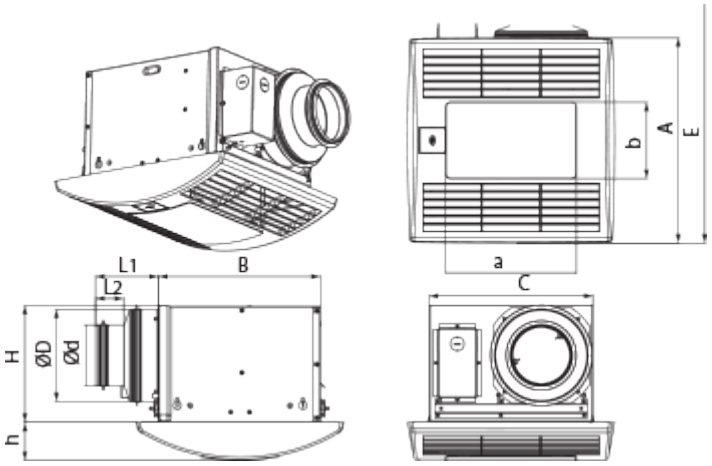
L1
B
L2
H
ØD
Ød
h
b
A
E
a
C

## Ecodesign

| | | | | | | |
|---|---|---|---|---|---|---|
| Trademark | Blauberg | | | | | |
| Model | Ceileo DC 150 Light | | | | | |
| Specific energy consumption (SEC) (kWh/(m²/a)) | Cold | | Average | | Warm | |
| | -33.8 | B | -15.9 | E | -5.6 | F |
| Type of ventilation unit | Unidirectional | | | | | |
| Type of drive installed | Variable speed | | | | | |
| Type of heat recovery system | None | | | | | |
| Maximum flow rate (m³/h) | 100 | | | | | |
| Electric power input (W) | 14 | | | | | |
| Reference flow rate (m³/s) | 0.044 | | | | | |
| Reference pressure difference (Pa) | 50 | | | | | |
| Specific power input (SPI) (W/(m³/h)) | 0.1 | | | | | |
| Control typology | Clock control | | | | | |
| Maximum external leakage rates (%) | 2.7 | | | | | |
| Declared typology | RVU UVU | | | | | |
| Sound power level (dB(A)) | 53 | | | | | |
| The annual electricity consumption (AEC) (kWh/a) | Cold | | Average | | Warm | |
| | 113 | | 113 | | 113 | |
| The annual heating saved (AHS) (kWh/a) | Cold | | Average | | Warm | |
| | 3667 | | 1874 | | 848 | |

## Accessories

### Speed control switches

| Name | Photo | Description |
|---|---|---|
| CDP-2/10 |  | Multi-speed switch |

### Flexible ducts

| Name | Photo | Description |
|---|---|---|
| BlauFlex PVC | | Flexible air ducts BlauFlex |

### Hoods

| Name | Photo | Description |
|---|---|---|
| Decor S 152 HK |  | Metal hoods |