

Ceileo Compact 250 Light IR

Low profile extract fans with low noise for ceiling mounting

- Lighting
- Impeller type: Centrifugal impeller with forward curved blades
- Casing material: Galvanized steel
- Backdraft protection: Backdraft damper
- Motion sensor
- Timer: Turn off timer

	Unit of measurement	Ceileo Compact 250 Light IR			
Speed	-	1	2	1	2
Phases	-	1			
Maximum supply voltage	V	240			
Minimum supply voltage	V	220			
Power supply frequency	Hz	50		60	
Maximum airflow	m³/h	170	260	160	270
Weight	kg	6.4			
Ambient air temperature min	°C	1			
Ambient air temperature max	°C	40			
Ingress protection rating	-	IPX2			

Dimensions

Ø d	L1	L2	A	B	C	E	H	h	G
98	100	40.5	330	278	255	395	134	57	max 620

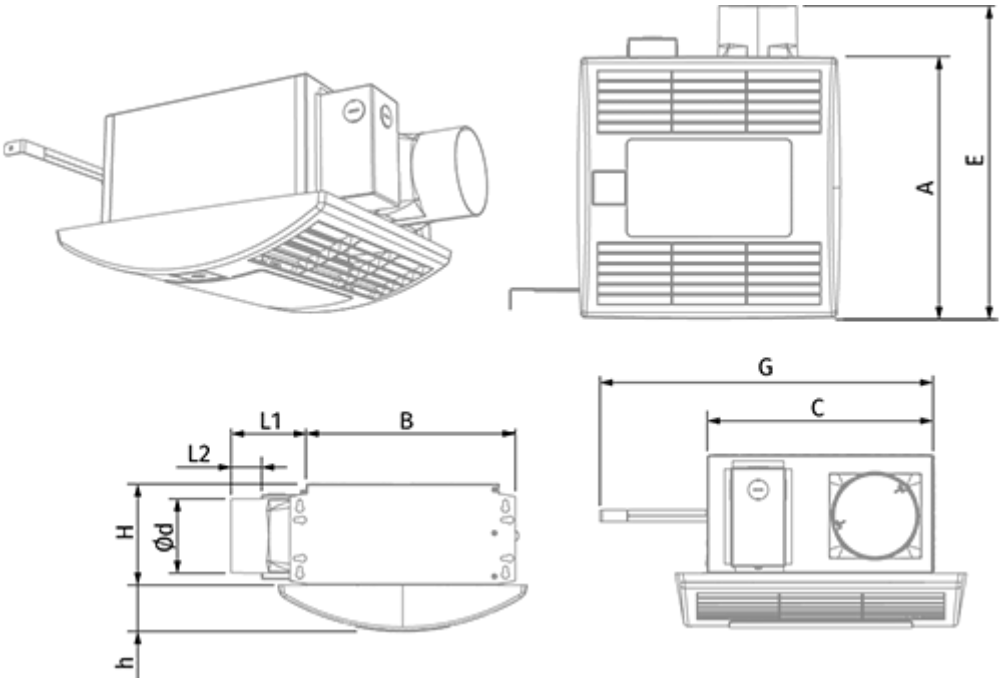
A
E
G
C
L1
B
L2
H
Ød
h

Ecodesign

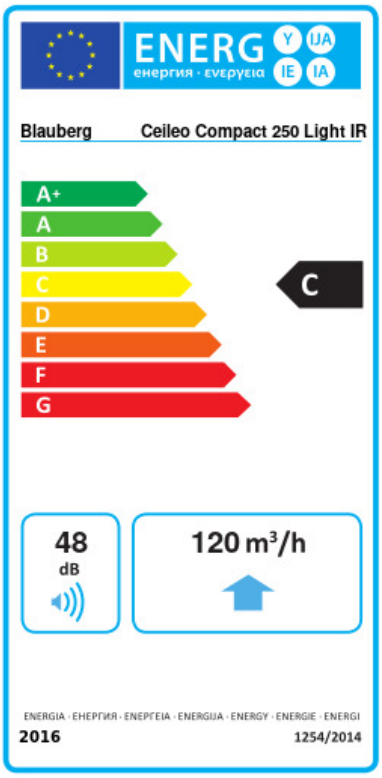

Trademark	Blauberg					
Model	Ceileo Compact 250 Light IR					
Specific energy consumption (SEC) (kWh/(m²/a))	Cold		Average		Warm	
	-52.4	A+	-25.3	C	-9.8	F
Type of ventilation unit	Unidirectional					
Type of drive installed	2-speed					
Type of heat recovery system	None					
Maximum flow rate (m³/h)	120					
Electric power input (W)	36					
Reference flow rate (m³/s)	0.037					
Reference pressure difference (Pa)	50					
Specific power input (SPI) (W/(m³/h))	0.159					
Control typology	Local demand control					
Maximum external leakage rates (%)	2.7					
Declared typology	RVU UVU					
Sound power level (dB(A))	48					
The annual electricity consumption (AEC) (kWh/a)	Cold		Average		Warm	
	119		119		119	
The annual heating saved (AHS) (kWh/a)	Cold		Average		Warm	
	5536		2830		1280	

Accessories

Speed control switches

Name	Photo	Description
CDP-2/10		Multi-speed switch

Flexible ducts

Name	Photo	Description
BlauFlex PVC		Flexible air ducts BlauFlex

Hoods

Name	Photo	Description
Decor S 102 HK		Metal hoods