

# Ceileo 250 Light

Centrifugal extract low-noise and low-watt fans for ceiling mounting

- Lighting
- Impeller type: Centrifugal impeller with forward curved blades
- Casing material: Galvanized steel
- Backdraft protection: Backdraft damper

| | Unit of measurement | Ceileo 250 Light | | | |
|---|---|---|---|---|---|
| Speed | - | 1 | 2 | 1 | 2 |
| Phases | - | 1 | | | |
| Maximum supply voltage | V | 230 | | | |
| Minimum supply voltage | V | 230 | | | |
| Power supply frequency | Hz | 50 | | 60 | |
| Maximum airflow | m³/h | 170 | 260 | 160 | 270 |
| Weight | kg | 6.4 | | | |
| Ambient air temperature min | °C | 1 | | | |
| Ambient air temperature max | °C | 40 | | | |
| Ingress protection rating | - | IPX2 | | | |

## Dimensions

| Ø D | Ø d | L1 | L2 | A | B | C | E | H | h | a | b |
|---|---|---|---|---|---|---|---|---|---|---|---|
| 148 | 98 | 100 | 45 | 330 | 258 | 260 | 395 | 188 | 62 | 208 | 123 |

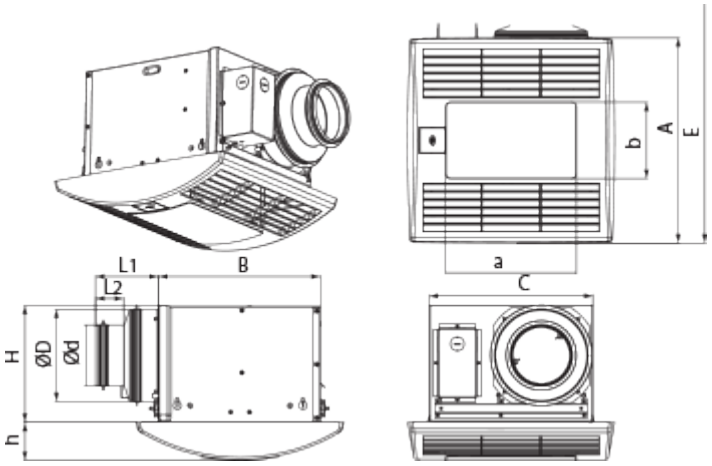
L1
B
L2
H
ØD
Ød
h
b
A
E
a
C

## Ecodesign

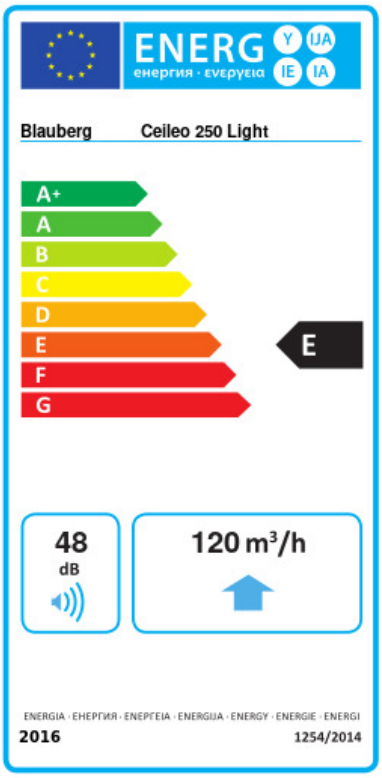


| Trademark | Blauberg | | | | | |
|---|---|---|---|---|---|---|
| Model | Ceileo 250 Light | | | | | |
| Specific energy consumption (SEC) (kWh/(m²/a)) | Cold | | Average | | Warm | |
| | -28.6 | B | -12.2 | E | -2.8 | F |
| Type of ventilation unit | Unidirectional | | | | | |
| Type of drive installed | 2-speed | | | | | |
| Type of heat recovery system | None | | | | | |
| Maximum flow rate (m³/h) | 120 | | | | | |
| Electric power input (W) | 36 | | | | | |
| Reference flow rate (m³/s) | 0.037 | | | | | |
| Reference pressure difference (Pa) | 50 | | | | | |
| Specific power input (SPI) (W/(m³/h)) | 0.159 | | | | | |
| Control typology | Manual control | | | | | |
| Maximum external leakage rates (%) | 2.7 | | | | | |
| Declared typology | RVU UVU | | | | | |
| Sound power level (dB(A)) | 48 | | | | | |
| The annual electricity consumption (AEC) (kWh/a) | Cold | | Average | | Warm | |
| | 199 | | 199 | | 199 | |
| The annual heating saved (AHS) (kWh/a) | Cold | | Average | | Warm | |
| | 3355 | | 1715 | | 776 | |

## Accessories

### Speed control switches

| Name | Photo | Description |
|---|---|---|
| CDP-2/10 |  | Multi-speed switch |

### Flexible ducts

| Name | Photo | Description |
|---|---|---|
| BlauFlex PVC | | Flexible air ducts BlauFlex |

### Hoods

| Name | Photo | Description |
|---|---|---|
| Decor S 102 HK |  | Metal hoods |
| Decor S 152 HK |  | Metal hoods |