

Ceileo 250 Light T

Centrifugal extract low-noise and low-watt fans for ceiling mounting

• Lighting
• Impeller type: Centrifugal impeller with forward curved blades
• Casing material: Galvanized steel
• Backdraft protection: Backdraft damper
• Timer: Turn off timer

	Unit of measurement	Ceileo 250 Light T			
Speed	-	1	2	1	2
Phases	-	1			
Maximum supply voltage	V	230			
Minimum supply voltage	V	230			
Power supply frequency	Hz	50		60	
Maximum airflow	m³/h	170	260	160	270
Weight	kg	6.4			
Ambient air temperature min	°C	1			
Ambient air temperature max	°C	40			
Ingress protection rating	-	IPX2			

Dimensions

Ø D	Ø d	L1	L2	A	B	C	E	H	h	a	b
148	98	100	45	330	258	260	395	188	62	208	123

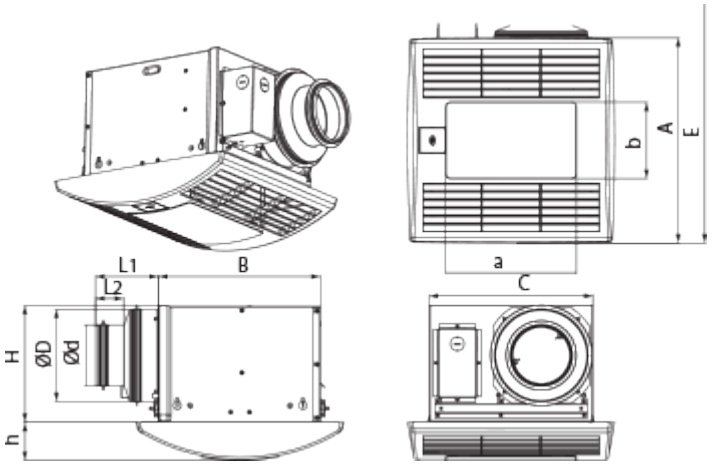
L1
B
L2
H
ØD
Ød
h
b
A
E
a
C

Ecodesign

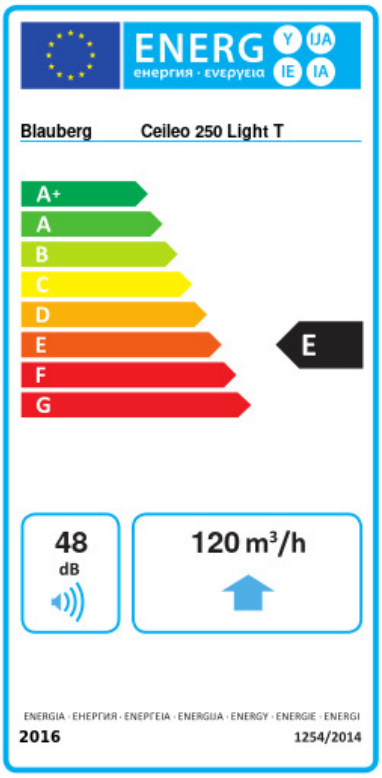

Trademark	Blauberg					
Model	Ceileo 250 Light T					
Specific energy consumption (SEC) (kWh/(m²/a))	Cold		Average		Warm	
	-32	B	-14.1	E	-3.8	F
Type of ventilation unit	Unidirectional					
Type of drive installed	2-speed					
Type of heat recovery system	None					
Maximum flow rate (m³/h)	120					
Electric power input (W)	36					
Reference flow rate (m³/s)	0.037					
Reference pressure difference (Pa)	50					
Specific power input (SPI) (W/(m³/h))	0.159					
Control typology	Clock control					
Maximum external leakage rates (%)	2.7					
Declared typology	RVU UVU					
Sound power level (dB(A))	48					
The annual electricity consumption (AEC) (kWh/a)	Cold		Average		Warm	
	187		187		187	
The annual heating saved (AHS) (kWh/a)	Cold		Average		Warm	
	3667		1874		848	

Accessories

Speed control switches

Name	Photo	Description
CDP-2/10		Multi-speed switch

Flexible ducts

Name	Photo	Description
BlauFlex PVC		Flexible air ducts BlauFlex

Hoods

Name	Photo	Description
Decor S 102 HK		Metal hoods
Decor S 152 HK		Metal hoods