

CDTE E10.0 TP

Speed controllers

- Casing material: Thermoplastic

	Unit of measurement	CDTE E10.0 TP
Phases	-	1
Minimum supply voltage	V	100
Maximum supply voltage	V	240
Power supply frequency	Hz	50/60
Weight	kg	1.04
Ambient air temperature min	°C	-20
Ambient air temperature max	°C	35
Ingress protection rating	-	IP54

Dimensions

H	L	W	L1	H1	ØD
205	124	97	102	140	4,6

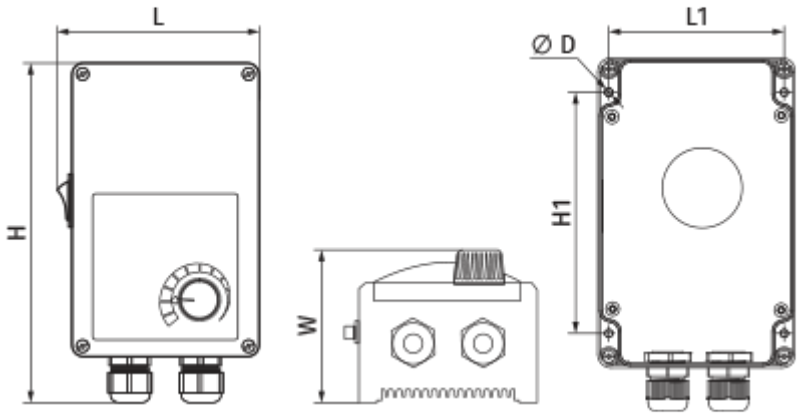
L
H
W
Ø D
L1
H1