

CDT1 E2.5

Multi-speed switches

- Casing material: Plastic

	Unit of measurement	CDT1 E2.5
Phases	-	1
Minimum supply voltage	V	230
Maximum supply voltage	V	230
Power supply frequency	Hz	50
Weight	kg	0.19
Ambient air temperature max	°C	35
Ingress protection rating	-	IP44

Dimensions

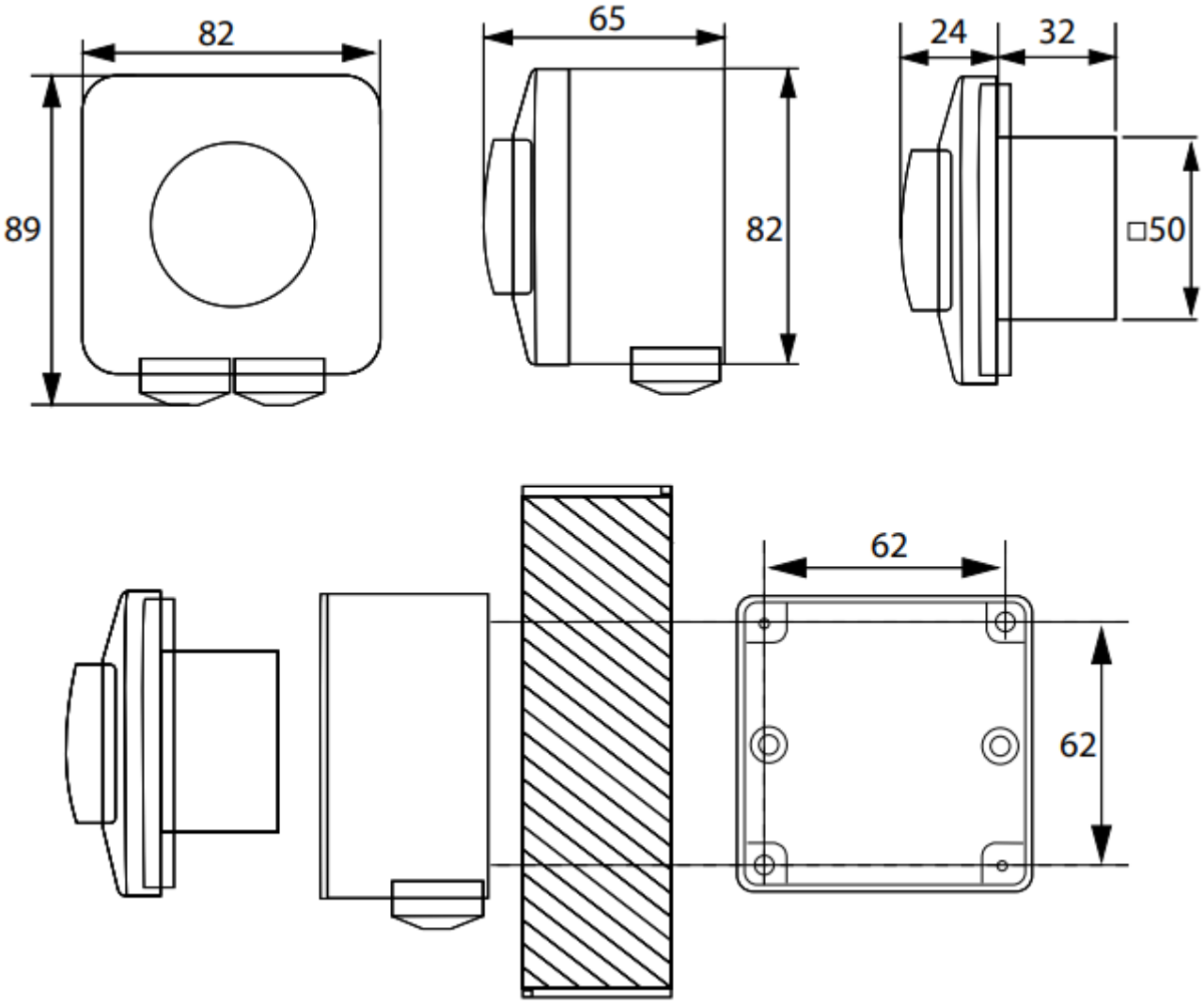
82
89
65
82
24
32
□50
62
62