

Bravo Platinum 125

Extract fans

- Backdraft protection: Backdraft damper

	Unit of measurement	Bravo Platinum 125
Minimum supply voltage	V	220
Maximum supply voltage	V	240
Power supply frequency	Hz	50
Maximum airflow	m³/h	192
Ingress protection rating	-	IP34
Impeller material	-	Plastic

Dimensions

a	b	c	Ø d	e
176	144	104	125	17

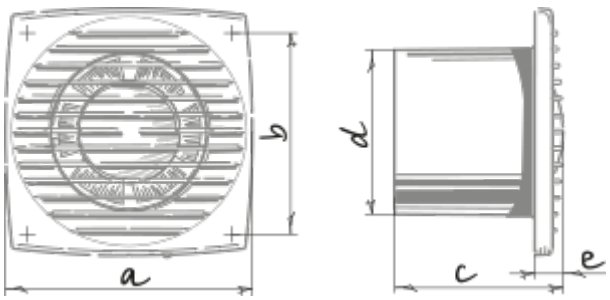

Accessories

Speed controllers

Name	Photo	Description
CDT E1.8		Thyristor speed controller

Flat duct

Name	Photo	Description
BlauPlast RR 125/2		Round duct
BlauPlast RR 125/1		Round duct
BlauPlast RR 125/1.5		Round duct
BlauPlast RR 125/0.35		Round duct
BlauPlast RR 125/0.5		Round duct
BlauPlast RR 125/2.5		Round duct
BlauPlast RTR 125/0.5-1		Round telescopic duct
BlauPlast RTR 125/0.35-0.5		Round telescopic duct
BlauPlast RSV 125		Flexible duct connector
BlauPlast RB 125/90°		Bend 90°
BlauPlast RB 125/45°		Bend 45°

BlauPlast RRT 125		T-joint for round ducts
BlauPlast WP 125		Wall plate for round ducts
BlauPlast RV 125		Round duct connector
BlauPlast RVK 125		Connector with backdraft damper for round ducts
BlauPlast RVPK 125		Round duct connector with a plate and a gravity backdraft damper
BlauPlast RVP 125		Round duct connector with plate
BlauPlast US-90° 125/220x90		Bend
BlauPlast US-90° 125/204x60		Bend
BlauPlast UBS 125/204x60		Connector
BlauPlast RH 125		Round duct holder

Flexible ducts

Name	Photo	Description
BlauFlex AF M1		Flexible air ducts BlauFlex
BlauFlex AF M0		Flexible air ducts BlauFlex
BlauFlex Iso N 127/7.6		Flexible air ducts BlauFlex
BlauFlex PVC		Flexible air ducts BlauFlex