

Bravo Chrome 100 (127-220V/60Hz)

Extract fans

- Backdraft protection: Backdraft damper

	Unit of measurement	Bravo Chrome 100 (127-220V/60Hz)
Minimum supply voltage	V	127
Maximum supply voltage	V	220
Power supply frequency	Hz	60
Ingress protection rating	-	IP34
Impeller material	-	Plastic

Dimensions

a	b	c	Ø d	e
150	122	102	100	17

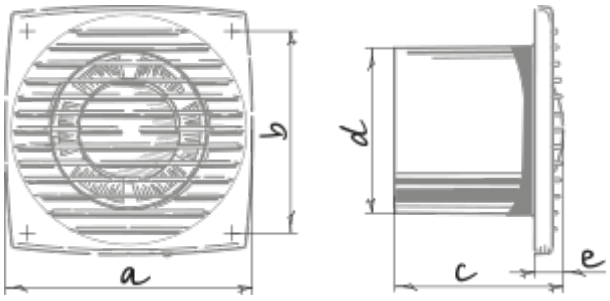

Accessories

Speed controllers

Name	Photo	Description
CDT E1.8		Thyristor speed controller

Flat duct

Name	Photo	Description
BlauPlast RR 100/0.35		Round duct
BlauPlast RR 100/2		Round duct
BlauPlast RR 100/1.5		Round duct
BlauPlast RR 100/1		Round duct
BlauPlast RR 100/0.5		Round duct
BlauPlast RR 100/2.5		Round duct
BlauPlast RTR 100/0.5-1		Round telescopic duct
BlauPlast RTR 100/0.35-0.5		Round telescopic duct
BlauPlast RSV 100		Flexible duct connector
BlauPlast RB 100/90°		Bend 90°
BlauPlast RB 100/45°		Bend 45°

BlauPlast RRT 100		T-joint for round ducts
BlauPlast WP 100		Wall plate for round ducts
BlauPlast RV 100		Round duct connector
BlauPlast RVK 100		Connector with backdraft damper for round ducts
BlauPlast RVPK 100		Round duct connector with a plate and a gravity backdraft damper
BlauPlast RVP 100		Round duct connector with plate
BlauPlast US-90° 100/110x55		Bend
BlauPlast US-90° 100/204x60		Bend
BlauPlast FRT 100/110x55		Flat to round connector
BlauPlast UBS 100/110x55		Connector
BlauPlast RVF 100		Round flexible duct connector
BlauPlast RVF 100 R		Round flexible duct connector
BlauPlast RVFI 100		Round flexible duct connector
BlauPlast RVFI 100 R		Round flexible duct connector
BlauPlast FRV 103/110x55		Reducer for flat and round ducts

BlauPlast RH 100		Round duct holder

Flexible ducts

Name	Photo	Description
BlauFlex AF M1		Flexible air ducts BlauFlex
BlauFlex AF M0		Flexible air ducts BlauFlex
BlauFlex PVC		Flexible air ducts BlauFlex