


# Bravo 125 T

Extract fans

- Backdraft protection: Backdraft damper
- Timer: Turn off timer

| | Unit of measurement | Bravo 125 T |
|---|---|---|
| Maximum supply voltage | V | 240 |
| Minimum supply voltage | V | 220 |
| Power supply frequency | Hz | 50 |
| Maximum airflow | m³/h | 192 |
| Ingress protection rating | - | IP34 |
| Impeller material | - | Plastic |

## Dimensions

| a | b | c | Ø d | e |
|---|---|---|---|---|
| 176 | 144 | 104 | 125 | 17 |

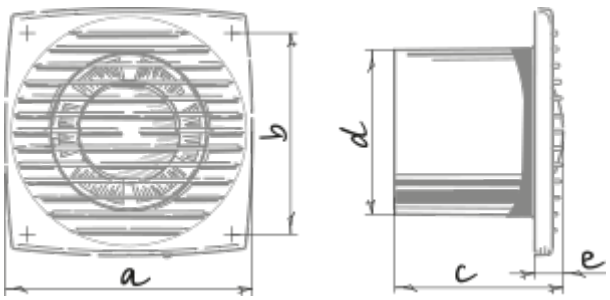

## Ecodesign

| | | | | | | |
|---|---|---|---|---|---|---|
| Trademark | Blauberg | | | | | |
| Model | Bravo 125 T | | | | | |
| Specific energy consumption (SEC) (kWh/(m²/a)) | Cold | | Average | | Warm | |
| | -35.1 | A | -17.2 | E | -6.9 | F |
| Type of ventilation unit | Unidirectional | | | | | |
| Type of drive installed | Multi-speed | | | | | |
| Type of heat recovery system | None | | | | | |
| Maximum flow rate (m³/h) | 192 | | | | | |
| Electric power input (W) | 16 | | | | | |
| Reference flow rate (m³/s) | 0.037 | | | | | |
| Specific power input (SPI) (W/(m³/h)) | 0.054 | | | | | |
| Control typology | Clock control | | | | | |
| Maximum external leakage rates (%) | 2.7 | | | | | |
| Sound power level (dB(A)) | 57 | | | | | |
| Declared typology | RVU UVU | | | | | |
| The annual electricity consumption (AEC) (kWh/a) | Cold | | Average | | Warm | |
| | 62 | | 62 | | 62 | |
| The annual heating saved (AHS) (kWh/a) | Cold | | Average | | Warm | |
| | 3667 | | 1874 | | 848 | |