


# Bravo 125 IR

Extract fans

- Backdraft protection: Backdraft damper
- Motion sensor

| | Unit of measurement | Bravo 125 IR |
|---|---|---|
| Minimum supply voltage | V | 220 |
| Maximum supply voltage | V | 240 |
| Power supply frequency | Hz | 50 |
| Maximum airflow | m³/h | 192 |
| Ingress protection rating | - | IP34 |
| Impeller material | - | Plastic |

## Dimensions

| a | b | c | Ø d | e |
|---|---|---|---|---|
| 176 | 144 | 104 | 125 | 17 |

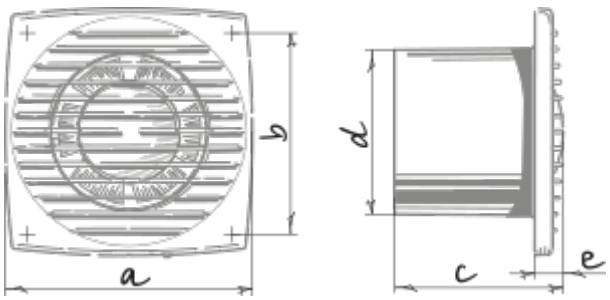

## Ecodesign

| | | | | | | |
|---|---|---|---|---|---|---|
| Trademark | Blauberg | | | | | |
| Model | Bravo 125 IR | | | | | |
| Specific energy consumption (SEC) (kWh/(m²/a)) | Cold | | Average | | Warm | |
| | 0 | B | 0 | E | 0 | F |
| Type of ventilation unit | Unidirectional | | | | | |
| Type of drive installed | Multi-speed | | | | | |
| Type of heat recovery system | None | | | | | |
| Maximum flow rate (m³/h) | 0 | | | | | |
| Electric power input (W) | 0 | | | | | |
| Reference flow rate (m³/s) | 0 | | | | | |
| Specific power input (SPI) (W/(m³/h)) | 0 | | | | | |
| Control typology | Manual control | | | | | |
| Maximum external leakage rates (%) | 0 | | | | | |
| Declared typology | RVU UVU | | | | | |
| Sound power level (dB(A)) | 0 | | | | | |
| The annual electricity consumption (AEC) (kWh/a) | Cold | | Average | | Warm | |
| | 0 | | 0 | | 0 | |
| The annual heating saved (AHS) (kWh/a) | Cold | | Average | | Warm | |
| | 0 | | 0 | | 0 | |