

Bravo 100 IR

Extract fans

- Motion sensor

	Unit of measurement	Bravo 100 IR
Maximum supply voltage	V	240
Minimum supply voltage	V	220
Power supply frequency	Hz	50
Maximum airflow	m³/h	101
Ingress protection rating	-	IP34
Impeller material	-	Plastic

Dimensions

a	b	c	Ø d	e
150	122	102	100	17

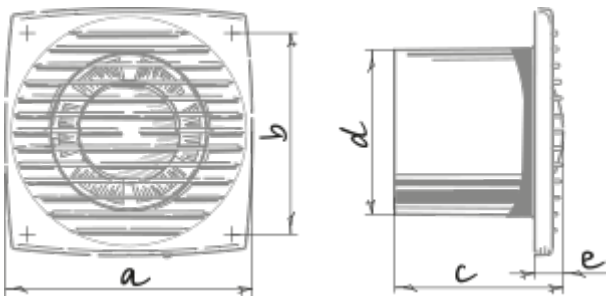

Ecodesign

Trademark	Blauberg					
Model	Bravo 100 IR					
Specific energy consumption (SEC) (kWh/(m²/a))	Cold		Average		Warm	
	-31	B	-14	E	-5	F
Type of ventilation unit	Unidirectional					
Type of drive installed	Multi-speed					
Type of heat recovery system	None					
Maximum flow rate (m³/h)	101					
Electric power input (W)	14					
Reference flow rate (m³/s)	0.02					
Specific power input (SPI) (W/(m³/h))	0.089					
Control typology	Manual control					
Maximum external leakage rates (%)	2.7					
Sound power level (dB(A))	55					
Declared typology	RVU UVU					
The annual electricity consumption (AEC) (kWh/a)	Cold		Average		Warm	
	100		100		100	
The annual heating saved (AHS) (kWh/a)	Cold		Average		Warm	
	3400		1700		800	