

Box-R 150

Centrifugal inline fans

• Impeller type: Centrifugal impeller with backward curved blades
• Casing material: Coated steel
• Installation in any position

	Unit of measurement	Box-R 150
Phases	-	1
Minimum supply voltage	V	230
Maximum supply voltage	V	230
Power supply frequency	Hz	50
Maximum airflow	m³/h	536
Weight	kg	7.1
Transported air temperature (max)	°C	50
Ingress protection rating	-	IPX4
Ingress protection rating of the drive	-	IP44
Impeller material	-	Plastic

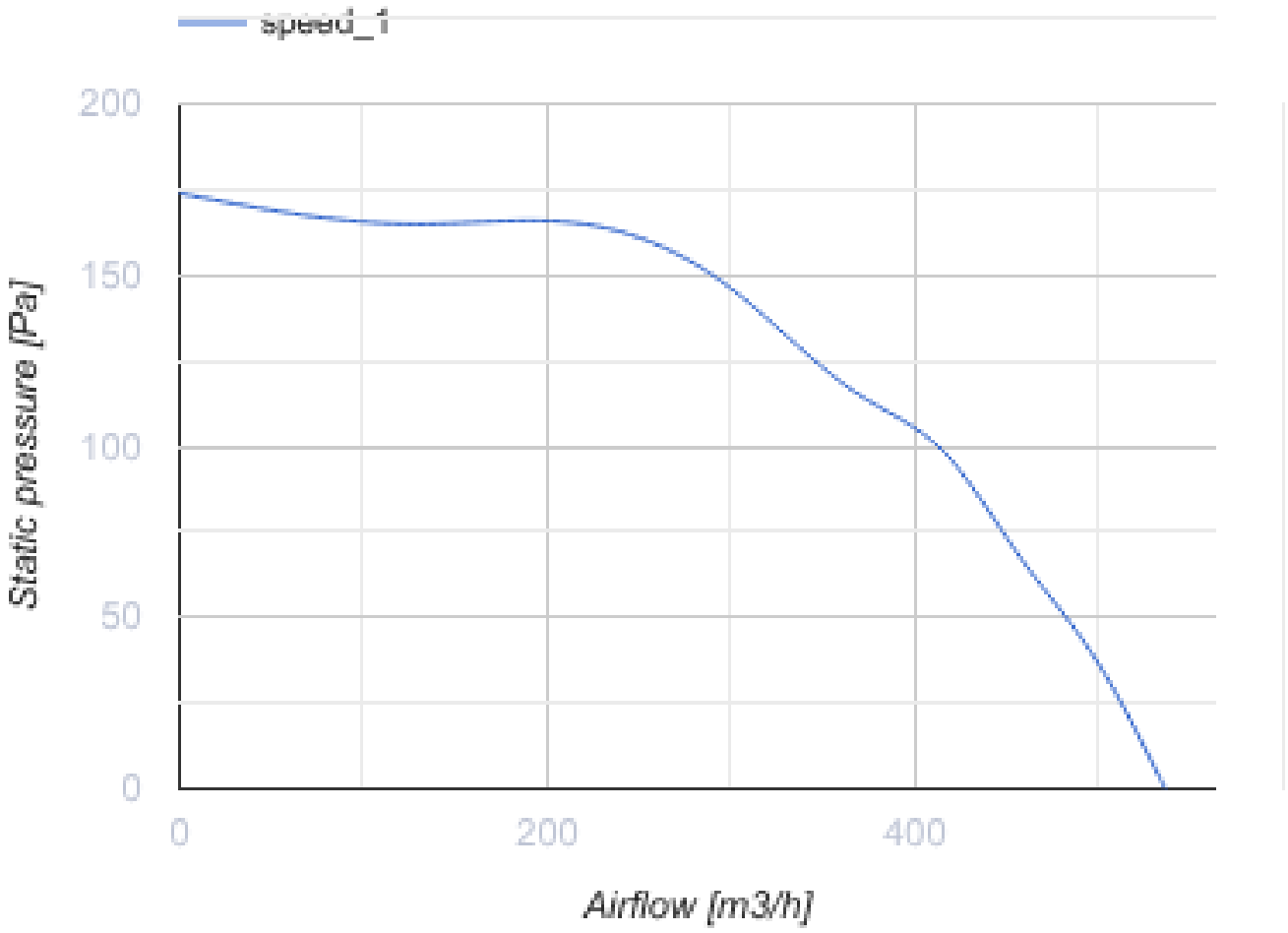
speed_1
200
150
100
50
0
Static pressure [Pa]
0
200
400
Airflow [m3/h]

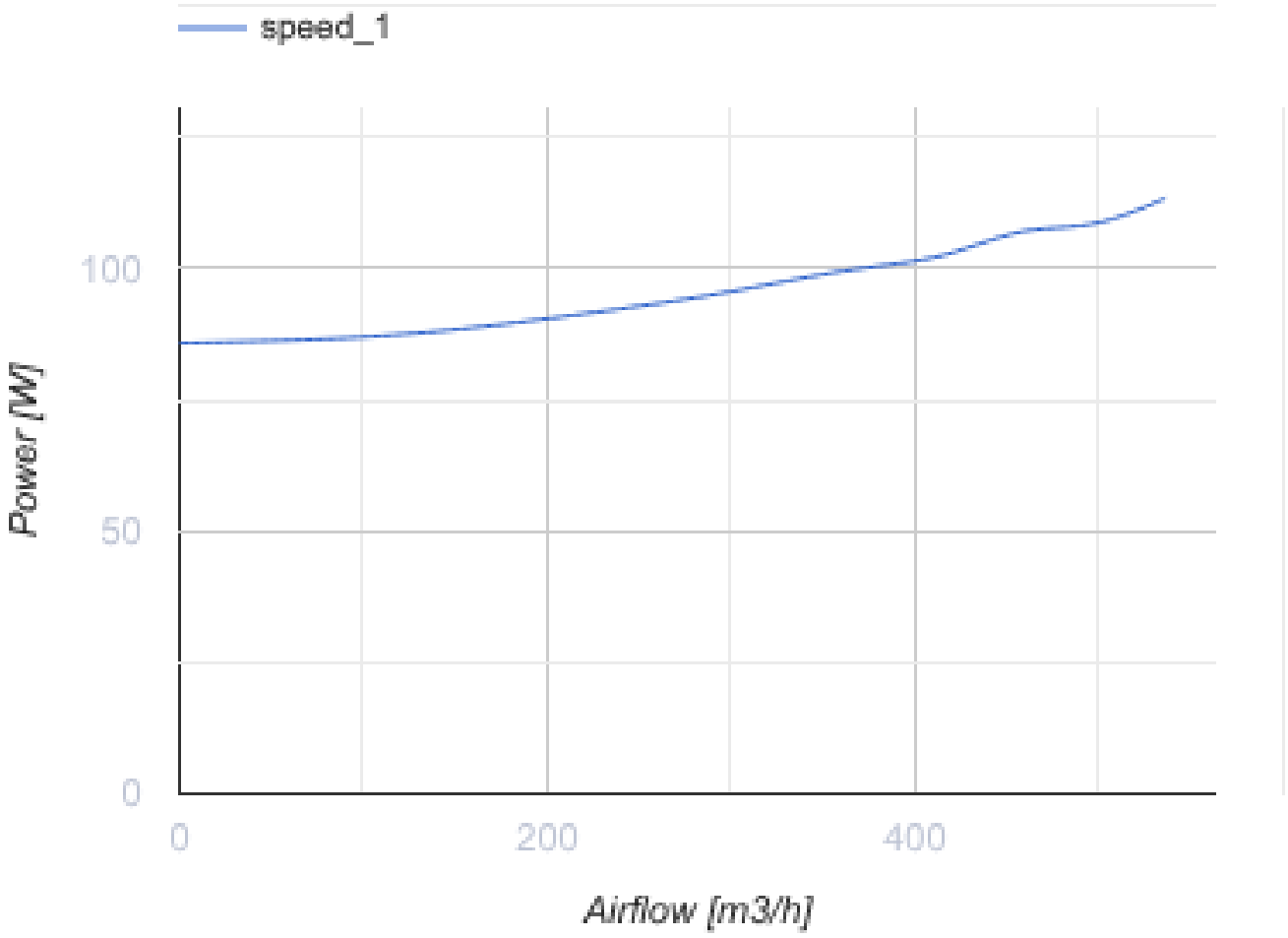

Dimensions

ØD	ØD1	B	H	L	L2
149	149	340	207	447	350

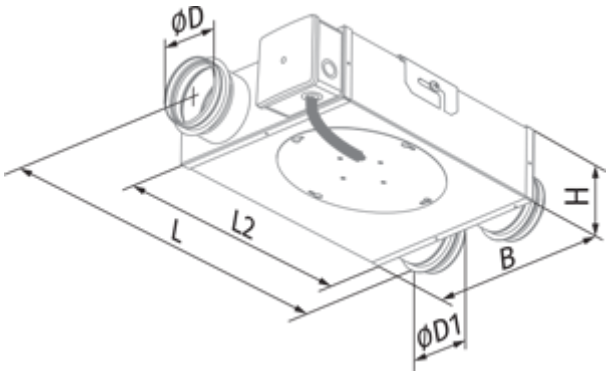

Ecodesign

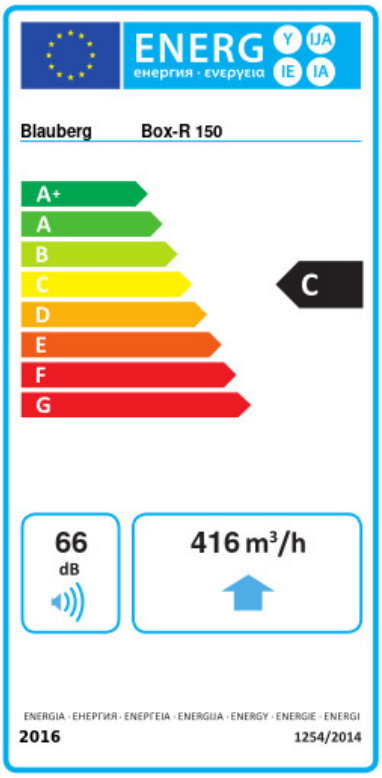

Trademark	Blauberg					
Model	Box-R 150					
Specific energy consumption (SEC) (kWh/(m²/a))	Cold		Average		Warm	
	-51	A+	-24	C	-8.5	F
Type of ventilation unit	Unidirectional					
Type of drive installed	Variable speed					
Type of heat recovery system	None					
Maximum flow rate (m³/h)	416					
Electric power input (W)	102.8					
Reference flow rate (m³/s)	0.081					
Reference pressure difference (Pa)	50					
Specific power input (SPI) (W/(m³/h))	0.326					
Control typology	Local demand control					
Maximum external leakage rates (%)	2.7					
Declared typology	RVU UVU					
Sound power level (dB(A))	66					
The annual electricity consumption (AEC) (kWh/a)	Cold		Average		Warm	
	173		173		173	
The annual heating saved (AHS) (kWh/a)	Cold		Average		Warm	
	5536		2830		1280	

Accessories

Speed control switches

Name	Photo	Description
CDP-2/5		Multi-speed switch
CDP-3/5		Multi-speed switch

Humidity sensors

Name	Photo	Description

HSE / HSI 1.5		Sensors
TE / TI 1.5		Timers
LSE / LSI 1.5		Sensors
IRSE / IRSI 1.5		Sensors

Temperature controllers

Name	Photo	Description
MLCD E2		Room temperature regulator