

Box-I EC 80x50-3 max

Centrifugal inline fans with backward curved blades in sound-insulated casings with EC-motors

- Sound-insulated casing
- Impeller type: Centrifugal impeller with backward curved blades
- Casing material: Galvanized steel
- Installation in any position

	Unit of measurement	Box-I EC 80x50-3 max
Phases	-	3
Maximum supply voltage	V	400
Minimum supply voltage	V	400
Power supply frequency	Hz	50/60
Maximum airflow	m^3/h	8535
Weight	kg	99.8
Transported air temperature (max)	°C	50
Transported air temperature (min)	°C	-25
Ingress protection rating	-	IPX4
Ingress protection rating of the drive	-	IP54
Impeller material	-	Aluminium

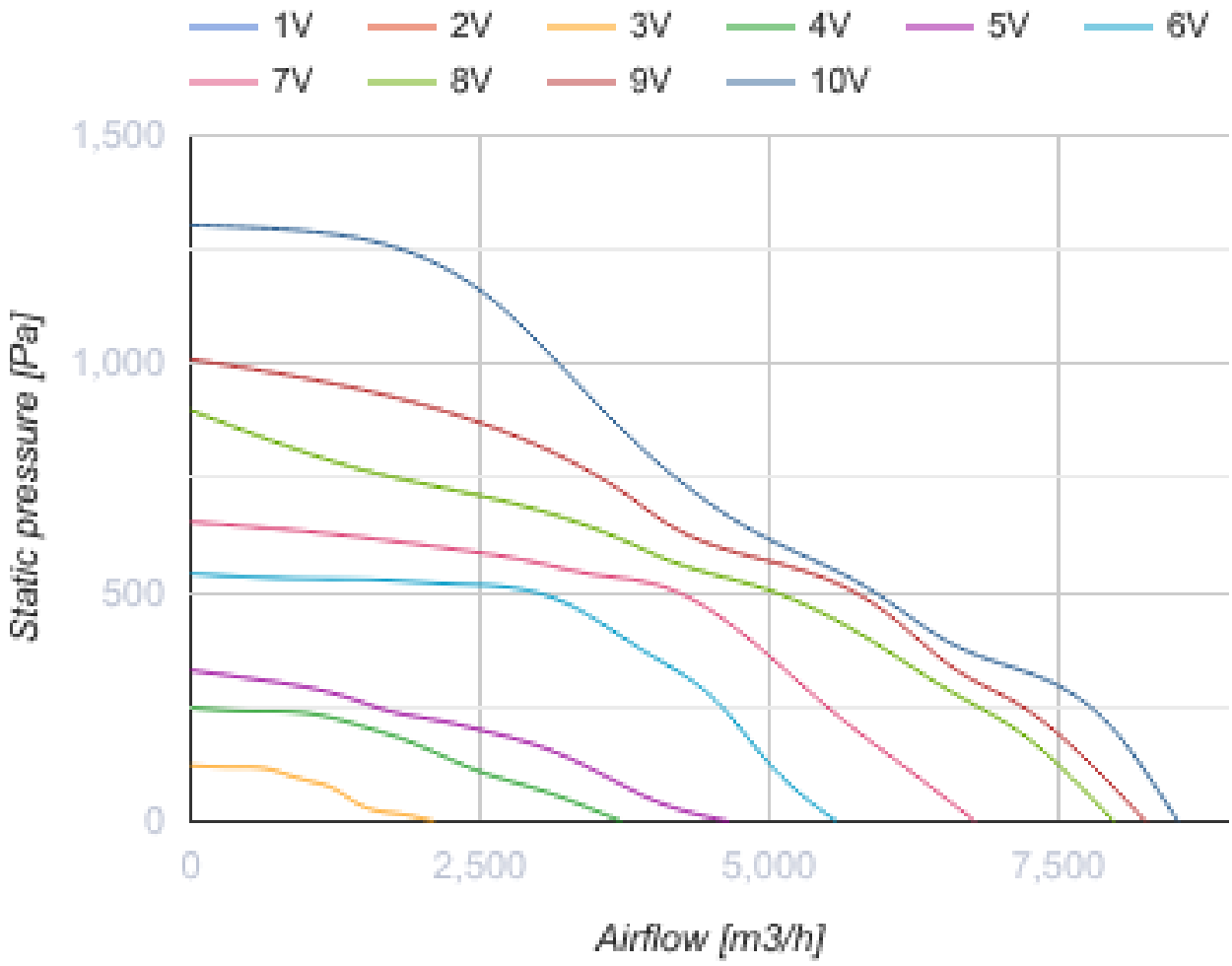
1V
2V
3V
4V
5V
6V
7V
8V
9V
10V
1,500
1,000
500
0
Static pressure [Pa]
0
2,500
5,000
7,500
Airflow [m3/h]

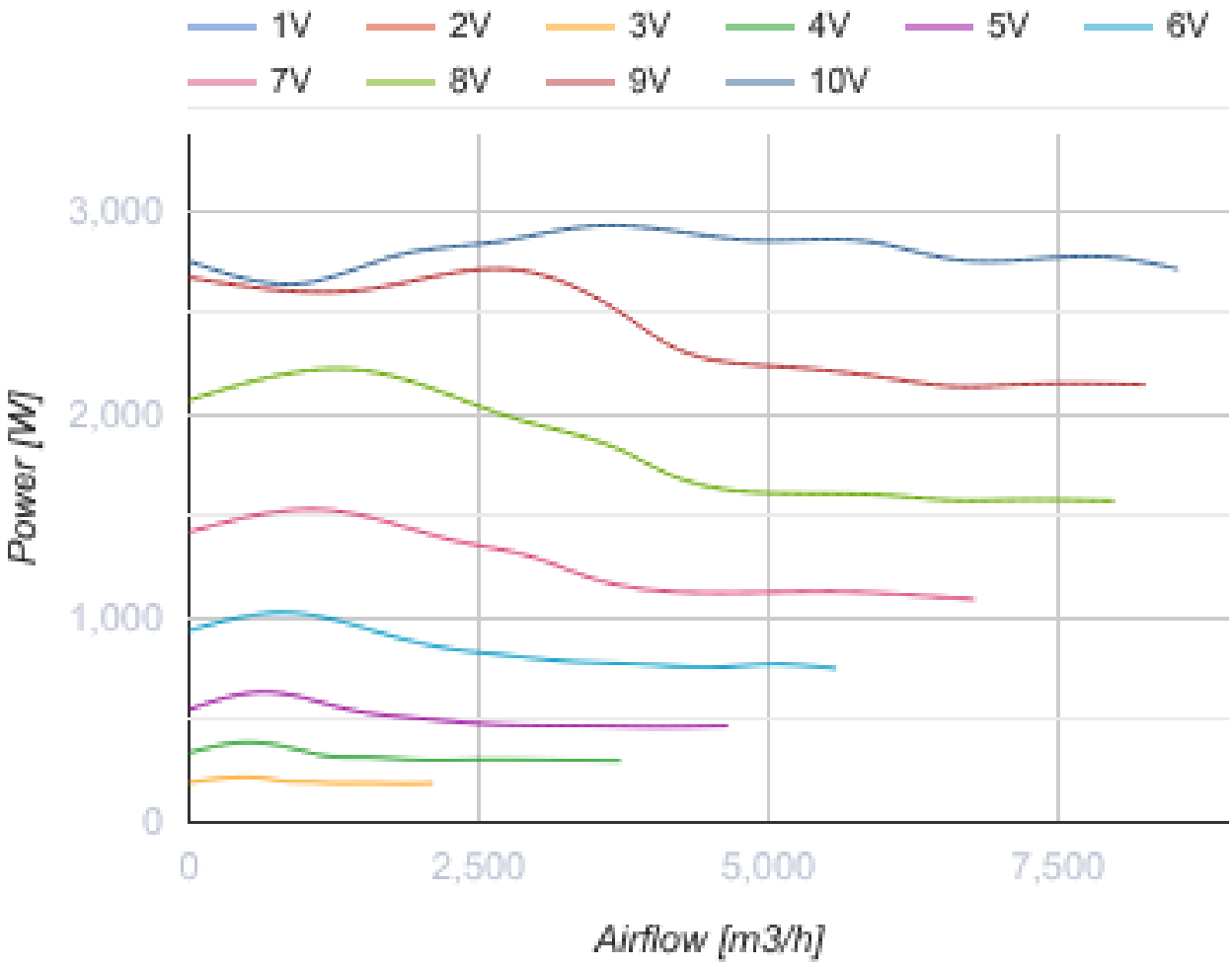

Dimensions

H	H1	H3	L	L1	W	W1	W2	W3
500	520	814	937	797	800	820	983	955

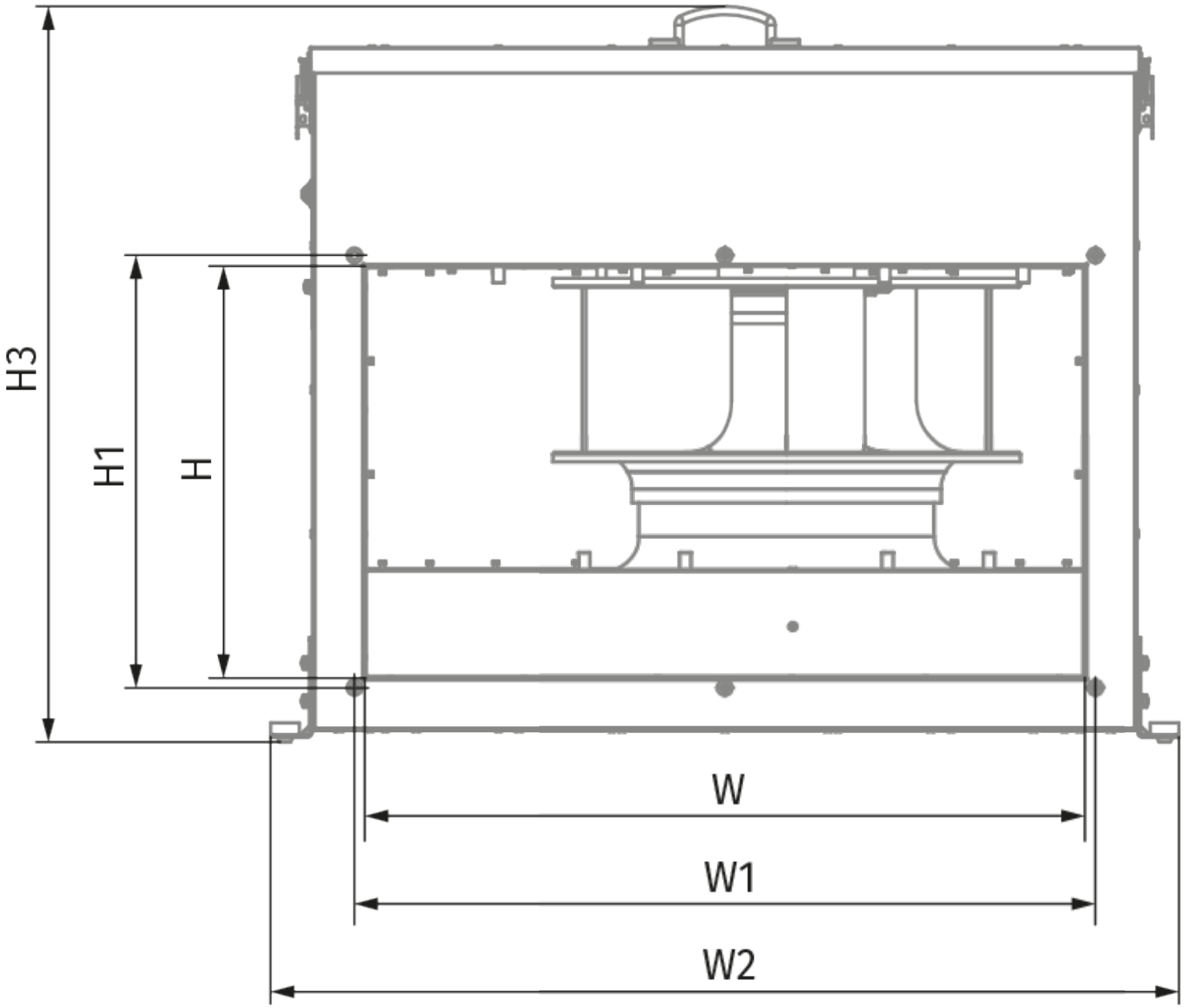
H3
H1
H
W
W1
W2

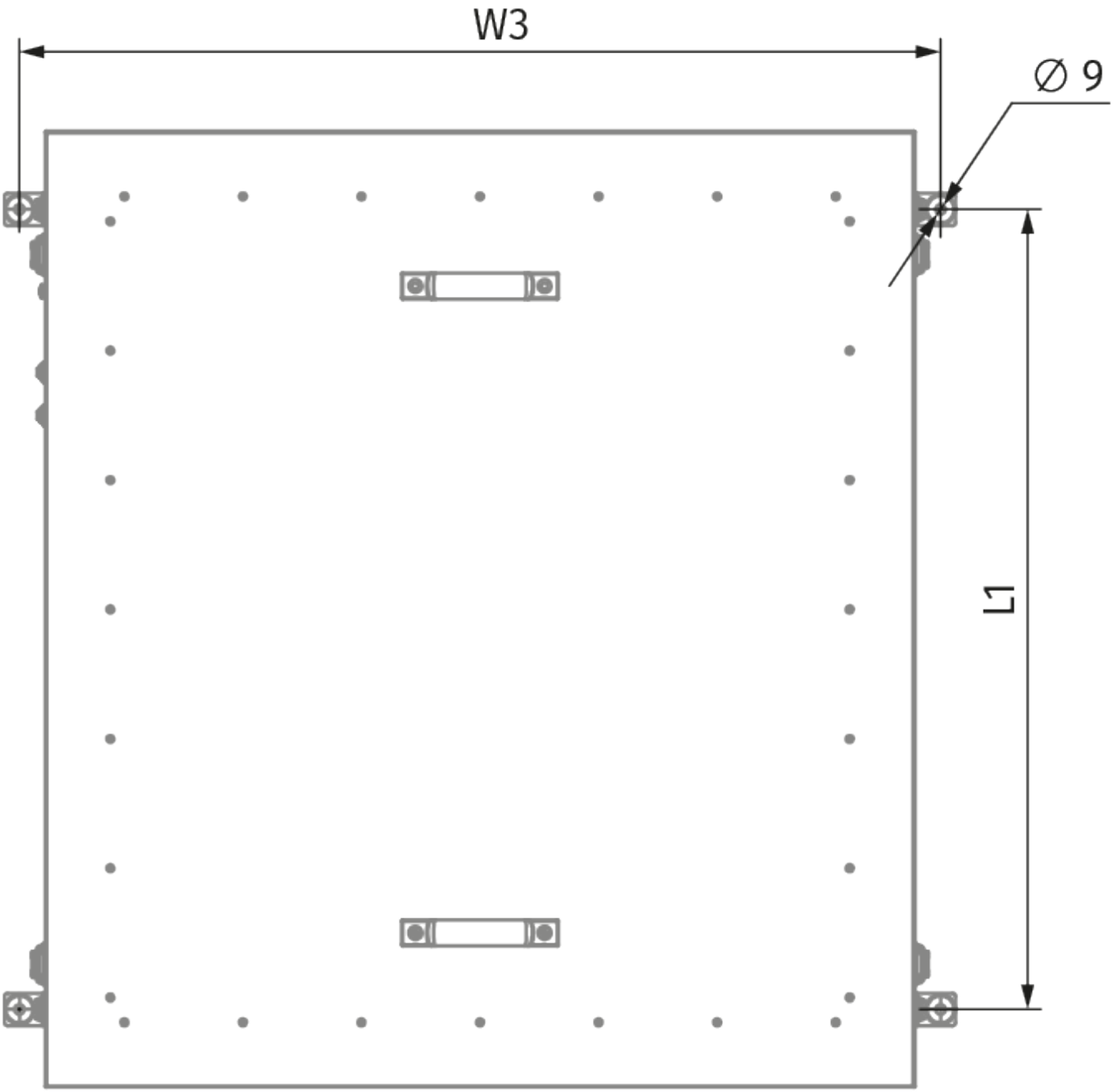
W3
Ø 9
L1

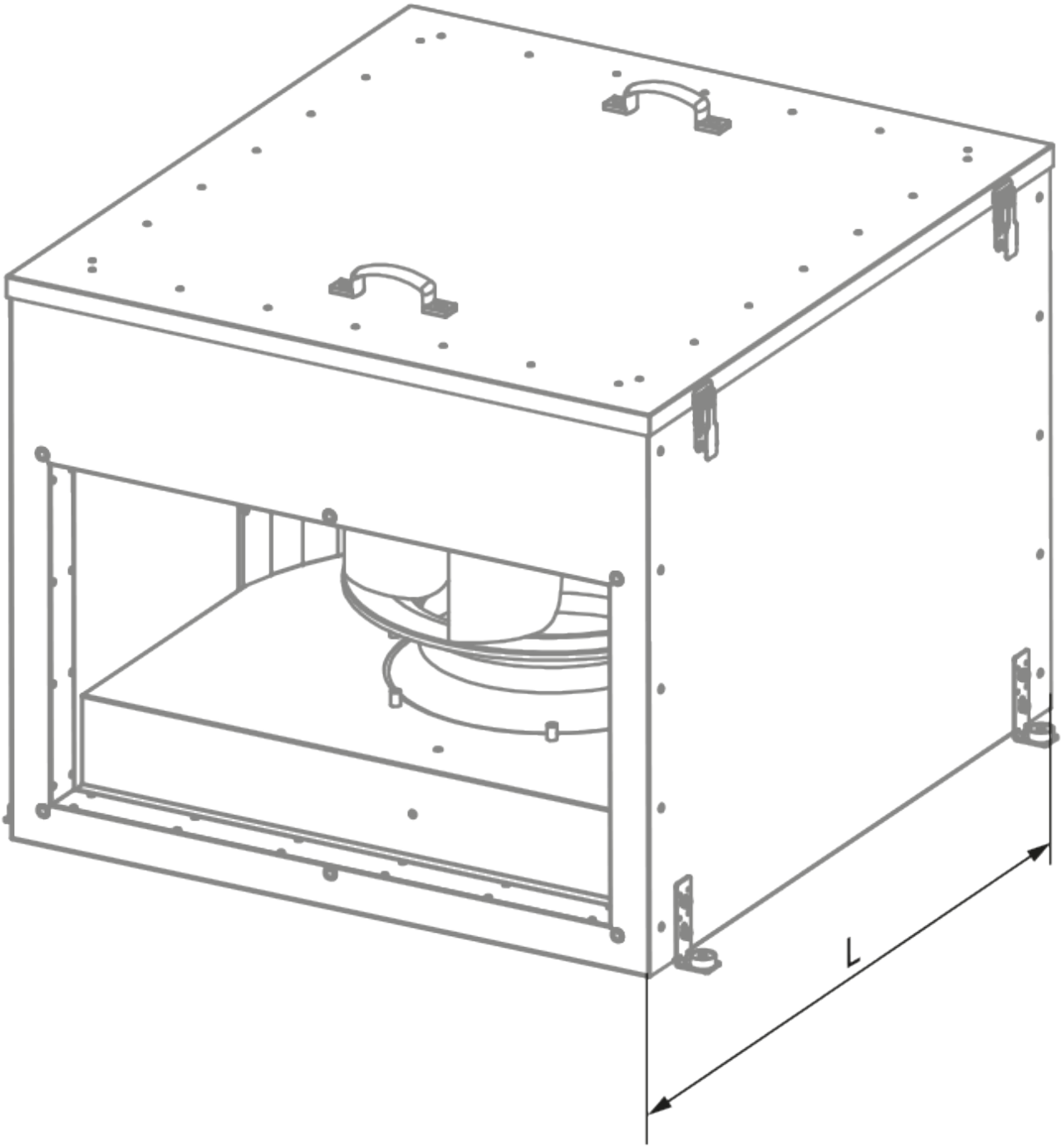
L

Ecodesign

Trademark	Blauberg
Model	Box-I EC 80x50-3 max
Type of ventilation unit	Unidirectional
Type of drive installed	Integrated VSD
Type of heat recovery system	None
Nominal external pressure (Pa)	475
Maximum external leakage rates (%)	2.7
Static efficiency (%)	60.8
Sound power level (dB(A))	62
Effective electric power input (kW)	0.789
Declared typology	NRVU UVU

Accessories

EC motors regulators

Name	Photo	Description
CDT E/0-10		Speed control for EC motors