

Box-I EC 70x40-1

Centrifugal inline fans with backward curved blades in sound-insulated casings with EC-motors

- Sound-insulated casing
- Impeller type: Centrifugal impeller with backward curved blades
- Casing material: Galvanized steel
- Installation in any position

	Unit of measurement	Box-I EC 70x40-1
Phases	-	1
Minimum supply voltage	V	230
Maximum supply voltage	V	230
Power supply frequency	Hz	50/60
Maximum airflow	m^3/h	5710
Weight	kg	82.6
Transported air temperature (max)	°C	50
Transported air temperature (min)	°C	-25
Ingress protection rating	-	IPX4
Ingress protection rating of the drive	-	IP54
Impeller material	-	Aluminium

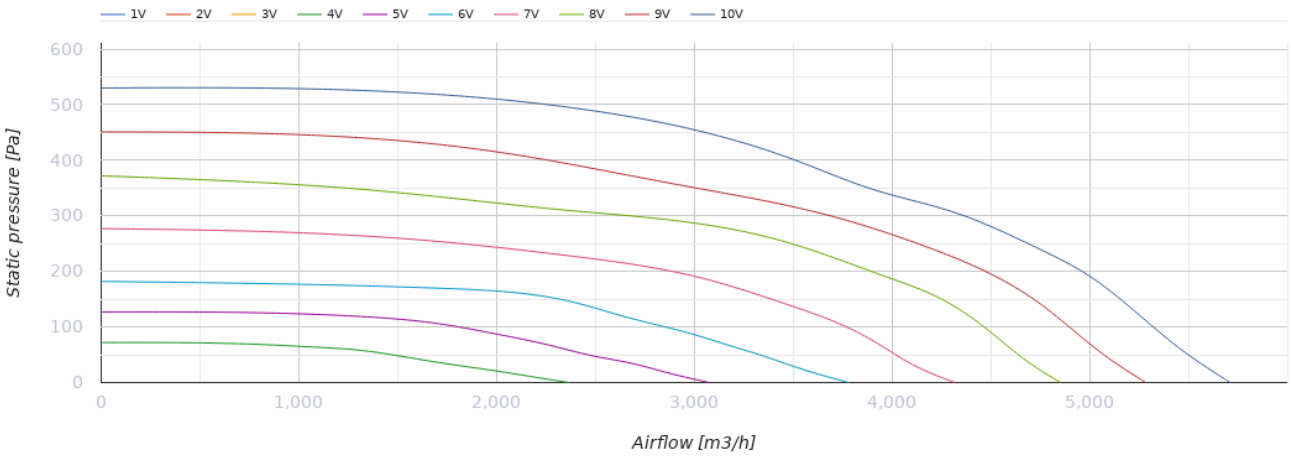

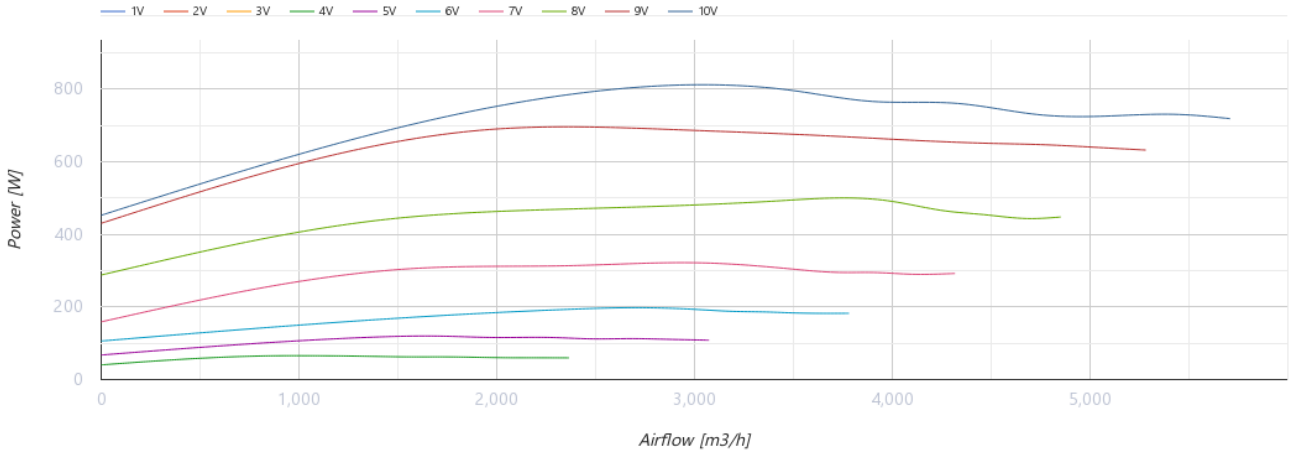

Dimensions

H	H1	H3	L	L1	W	W1	W2	W3
400	420	714	882	742	700	720	883	855

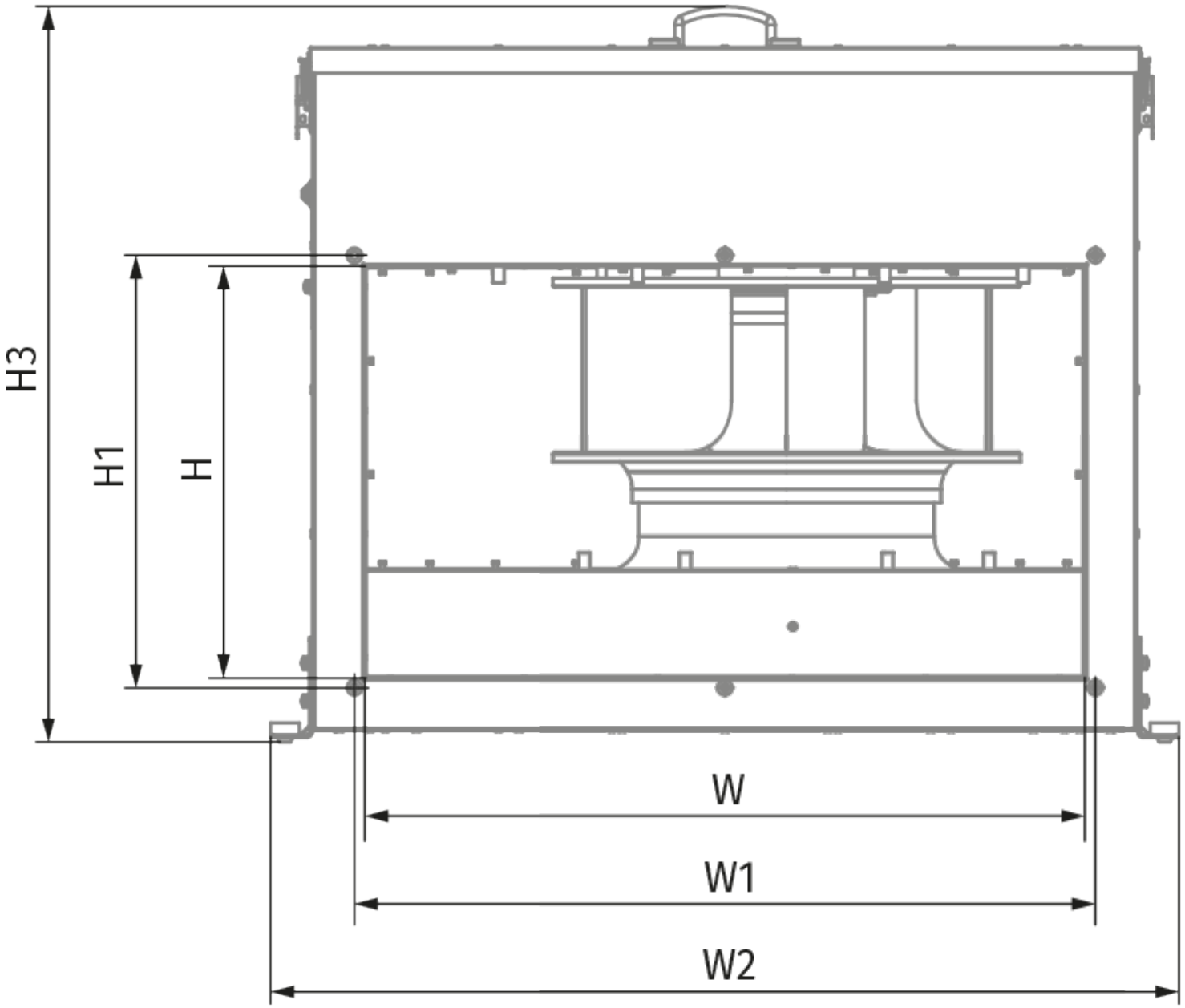
H3
H1
H
W
W1
W2

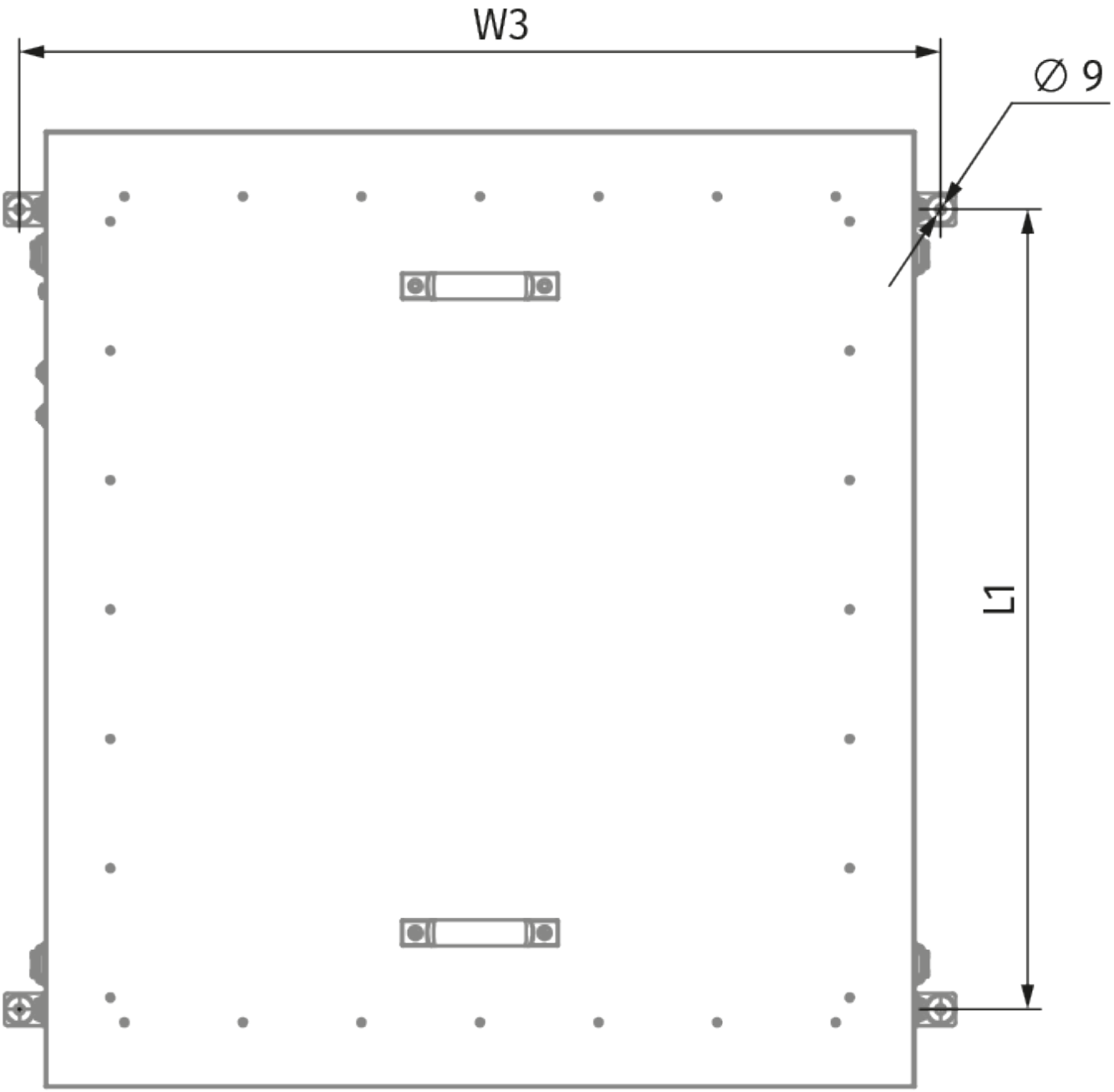
W3
Ø 9
L1

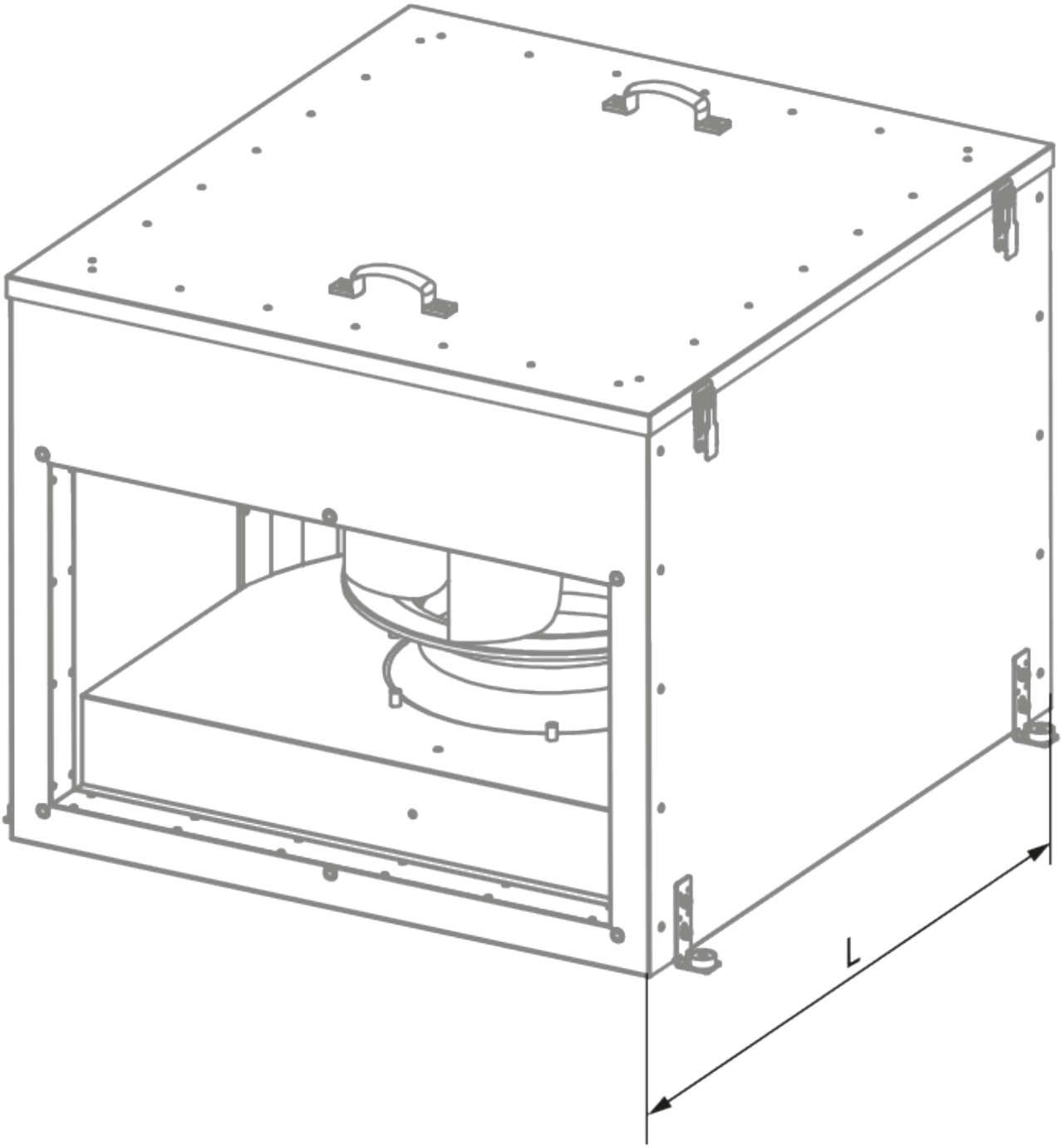
L

Ecodesign

Trademark	Blauberg
Model	Box-I EC 70x40-1
Type of ventilation unit	Unidirectional
Type of drive installed	Integrated VSD
Type of heat recovery system	None
Nominal external pressure (Pa)	145
Maximum external leakage rates (%)	2.7
Static efficiency (%)	57.5
Declared typology	NRVU UVU
Effective electric power input (kW)	0.194
Sound power level (dB(A))	57

Accessories

EC motors regulators

Name	Photo	Description
CDT E/0-10		Speed control for EC motors