

# Box-I EC 50x25-1 max

Centrifugal inline fans with backward curved blades in sound-insulated casings with EC-motors

- Sound-insulated casing
- Impeller type: Centrifugal impeller with backward curved blades
- Casing material: Galvanized steel
- Installation in any position

| | Unit of measurement | Box-I EC 50x25-1 max |
|---|---|---|
| Phases | - | 1 |
| Minimum supply voltage | V | 230 |
| Maximum supply voltage | V | 230 |
| Power supply frequency | Hz | 50/60 |
| Maximum airflow | $m^3/h$ | 2480 |
| Weight | kg | 27.7 |
| Transported air temperature (max) | °C | 50 |
| Transported air temperature (min) | °C | -25 |
| Ingress protection rating | - | IPX4 |
| Ingress protection rating of the drive | - | IP54 |
| Impeller material | - | Aluminium |

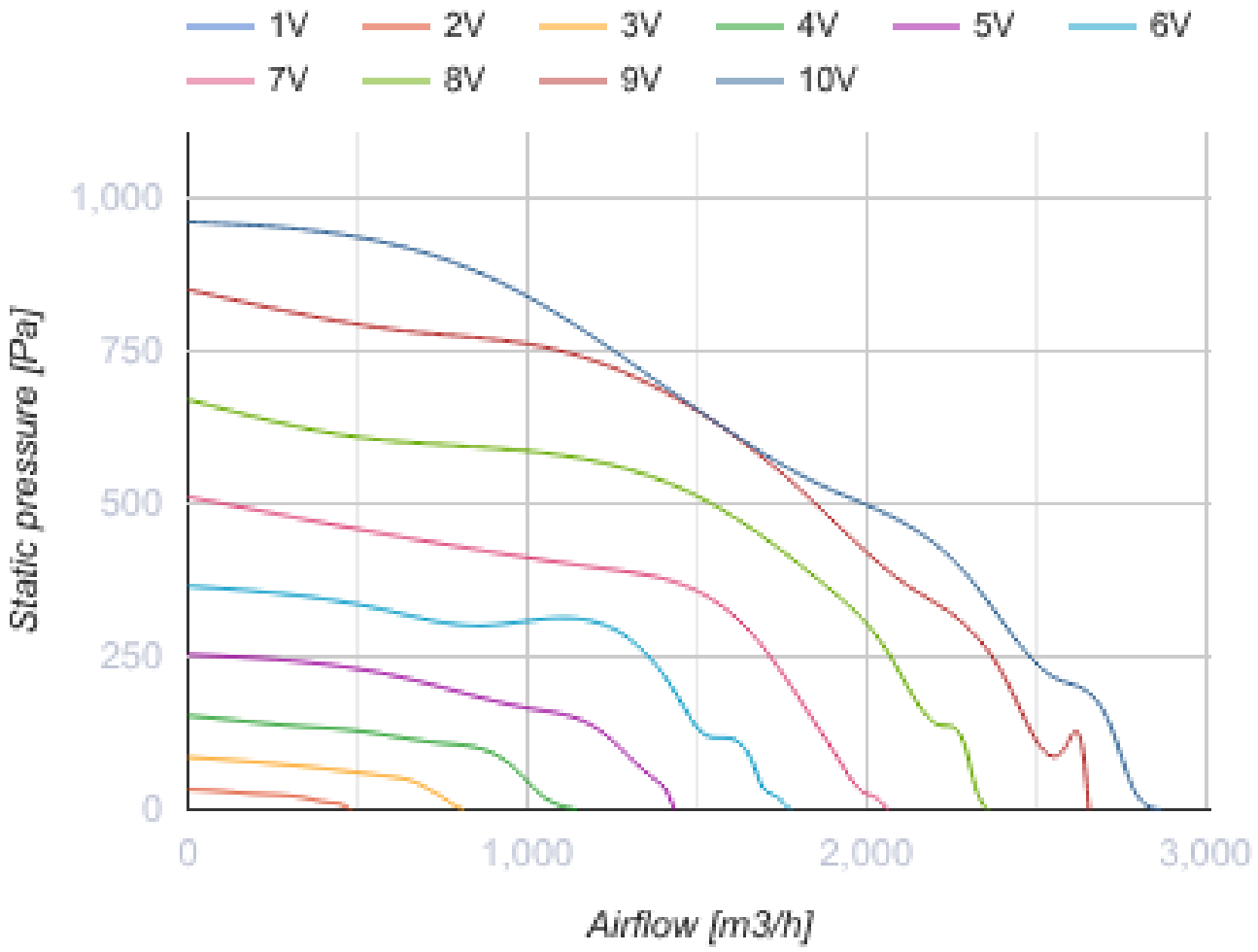
1V
2V
3V
4V
5V
6V
7V
8V
9V
10V
1,000
750
500
250
0
Static pressure [Pa]
0
1,000
2,000
3,000
Airflow [m3/h]

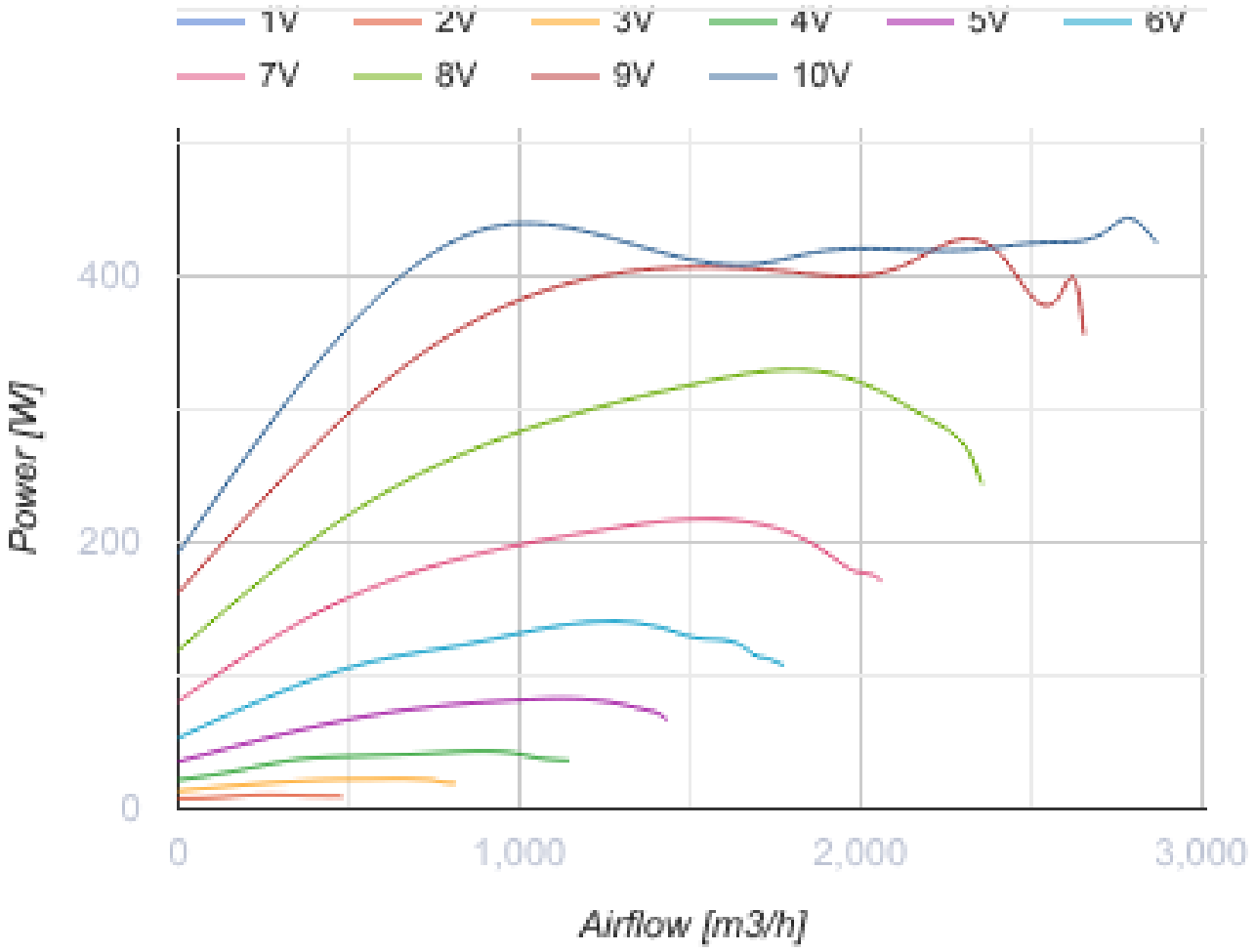


## Dimensions

| H | H1 | H2 | H3 | L | W | W1 | W2 | W3 |
|---|---|---|---|---|---|---|---|---|
| 250 | 270 | 290 | 373 | 560 | 500 | 520 | 540 | 564 |

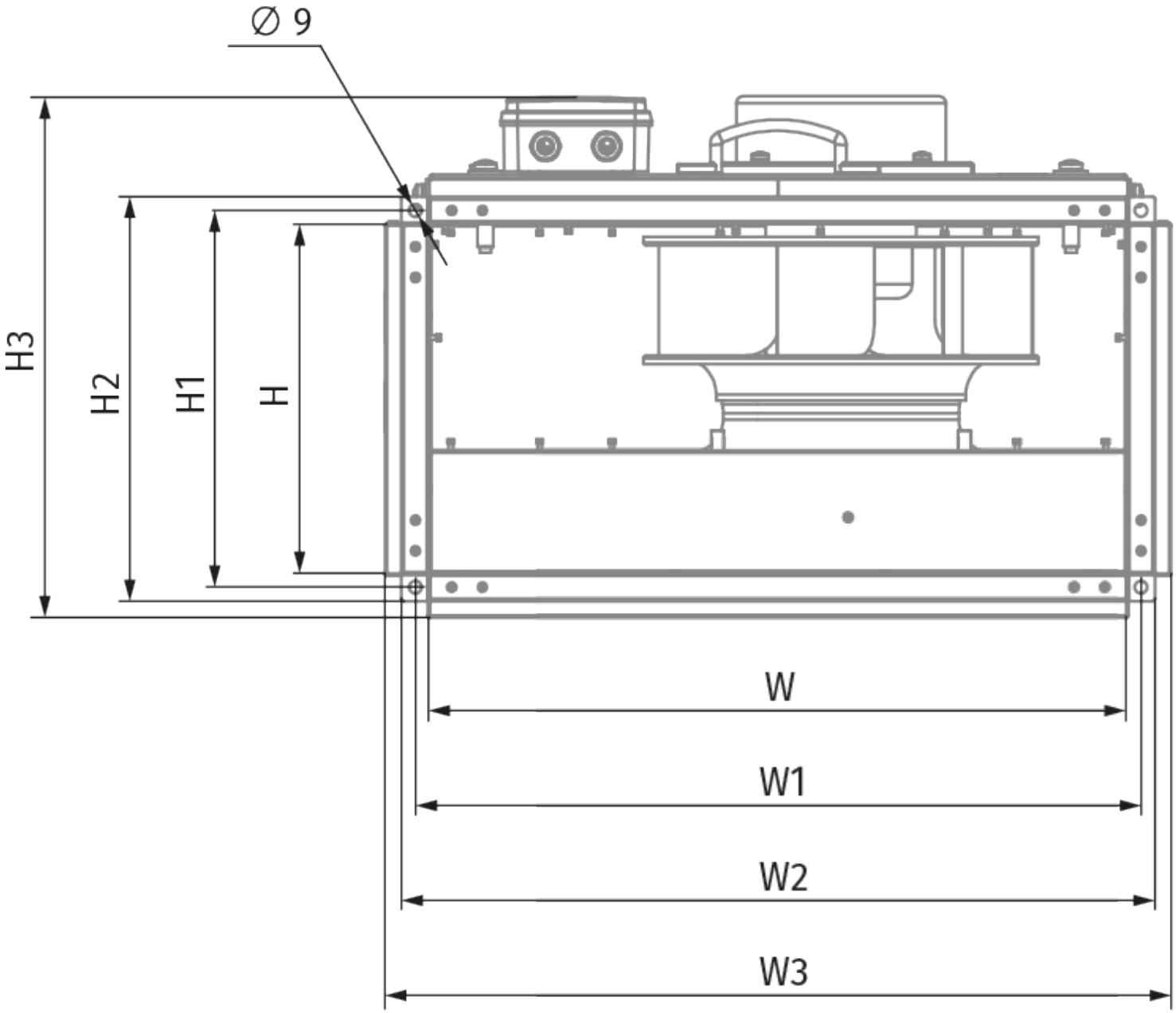
∅ 9
H3
H2
H1
H
W
W1
W2
W3

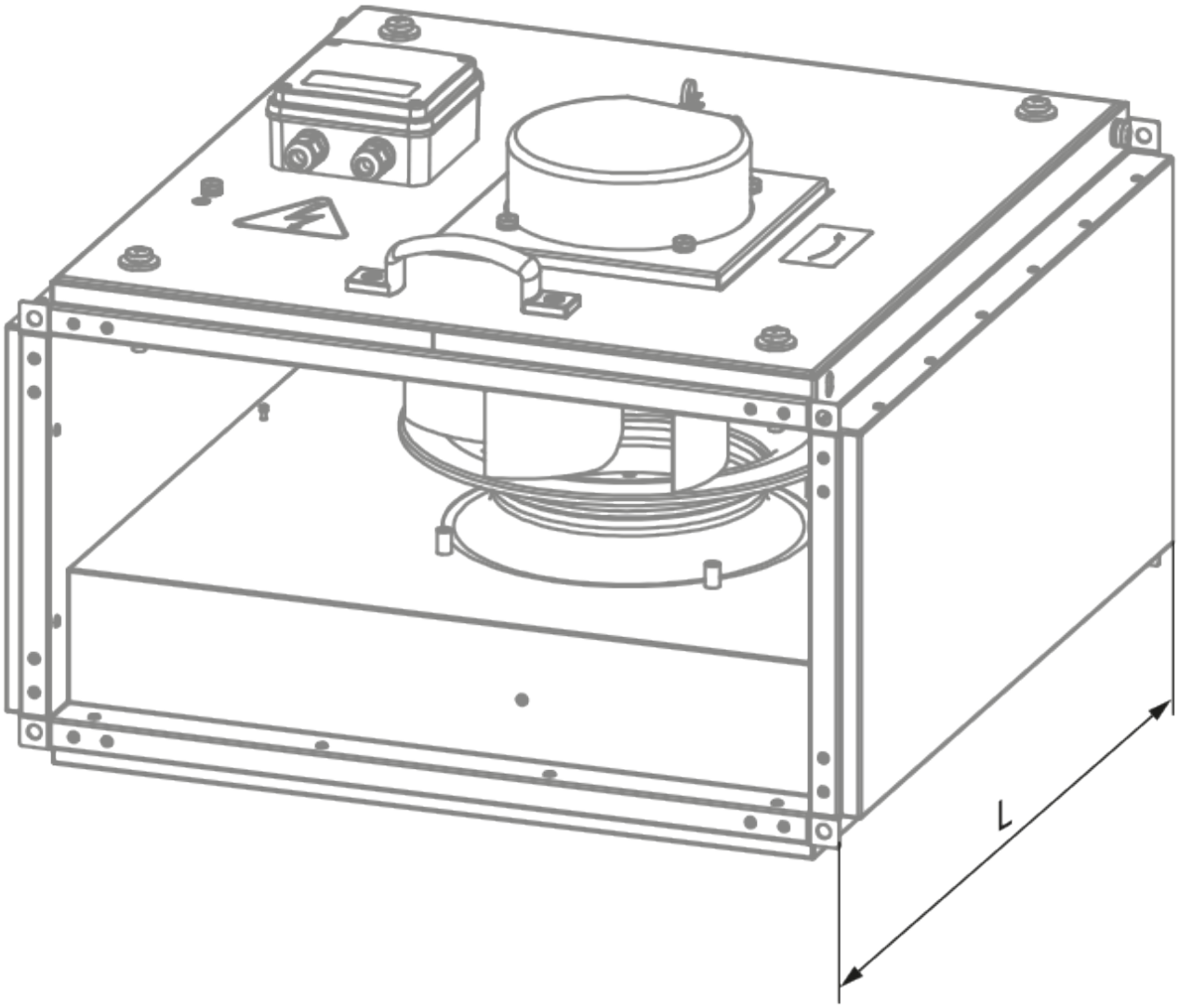
L

## Ecodesign

| | |
|---|---|
| Trademark | Blauberg |
| Model | Box-I EC 50x25-1 max |
| Type of ventilation unit | Unidirectional |
| Type of drive installed | Integrated VSD |
| Type of heat recovery system | None |
| Nominal external pressure (Pa) | 501 |
| Maximum external leakage rates (%) | 2.7 |
| Static efficiency (%) | 76.6 |
| Declared typology | NRVU UVU |
| Effective electric power input (kW) | 0.321 |
| Sound power level (dB(A)) | 61 |

## Accessories

### EC motors regulators

| Name | Photo | Description |
|---|---|---|
| CDT E/0-10 |  | Speed control for EC motors |