

Box-I EC 40x20-1 max

Centrifugal inline fans with backward curved blades in sound-insulated casings with EC-motors

- Sound-insulated casing
- Impeller type: Centrifugal impeller with backward curved blades
- Casing material: Galvanized steel
- Installation in any position

	Unit of measurement	Box-I EC 40x20-1 max
Phases	-	1
Minimum supply voltage	V	230
Maximum supply voltage	V	230
Power supply frequency	Hz	50/60
Maximum airflow	m³/h	1190
Weight	kg	16.8
Transported air temperature (max)	°C	50
Transported air temperature (min)	°C	-25
Ingress protection rating	-	IPX4
Ingress protection rating of the drive	-	IP54
Impeller material	-	Plastic

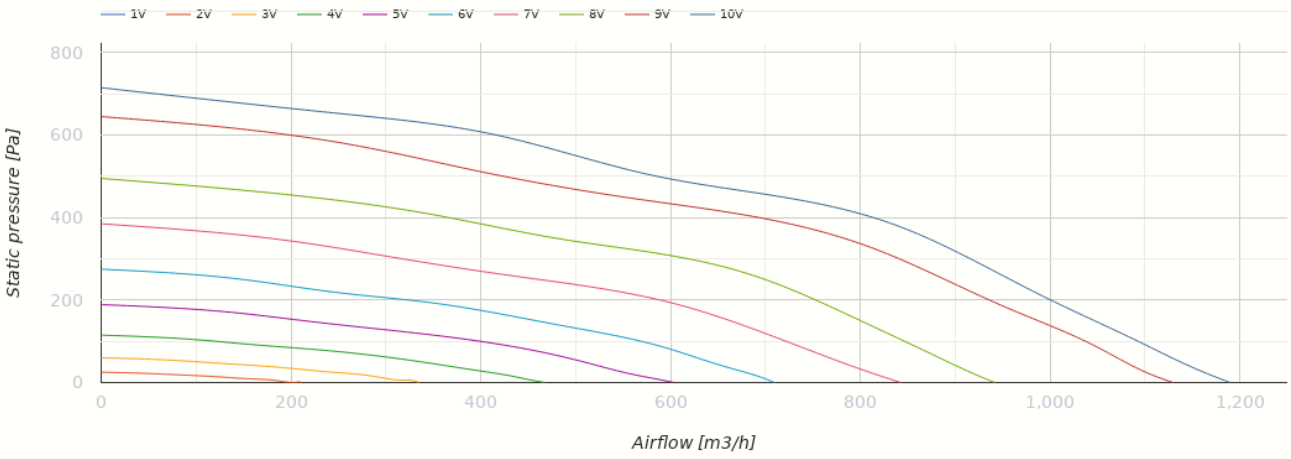

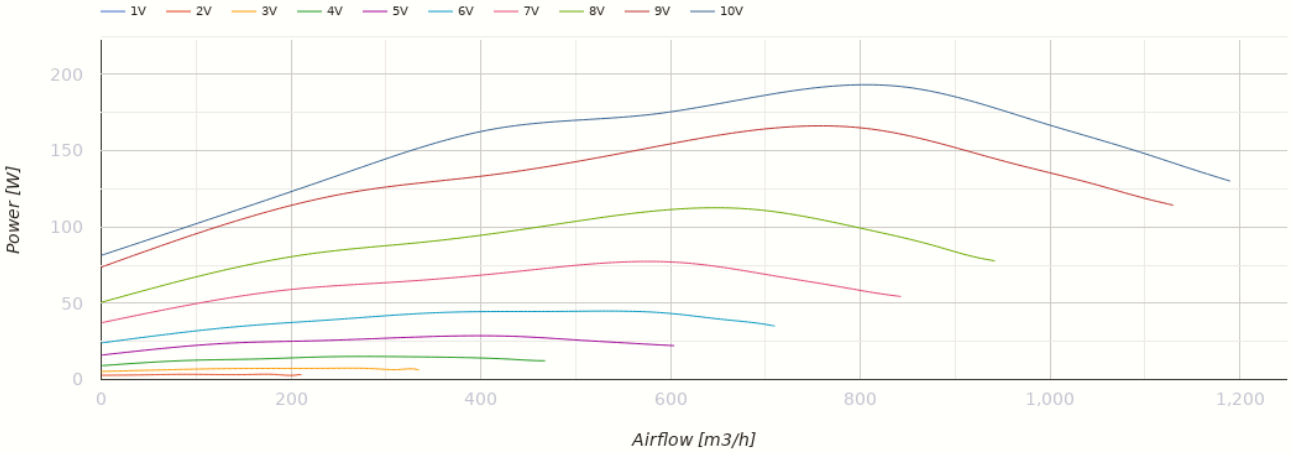

Dimensions

H	H1	H2	H3	L	W	W1	W2	W3
200	220	240	322	460	400	420	440	464

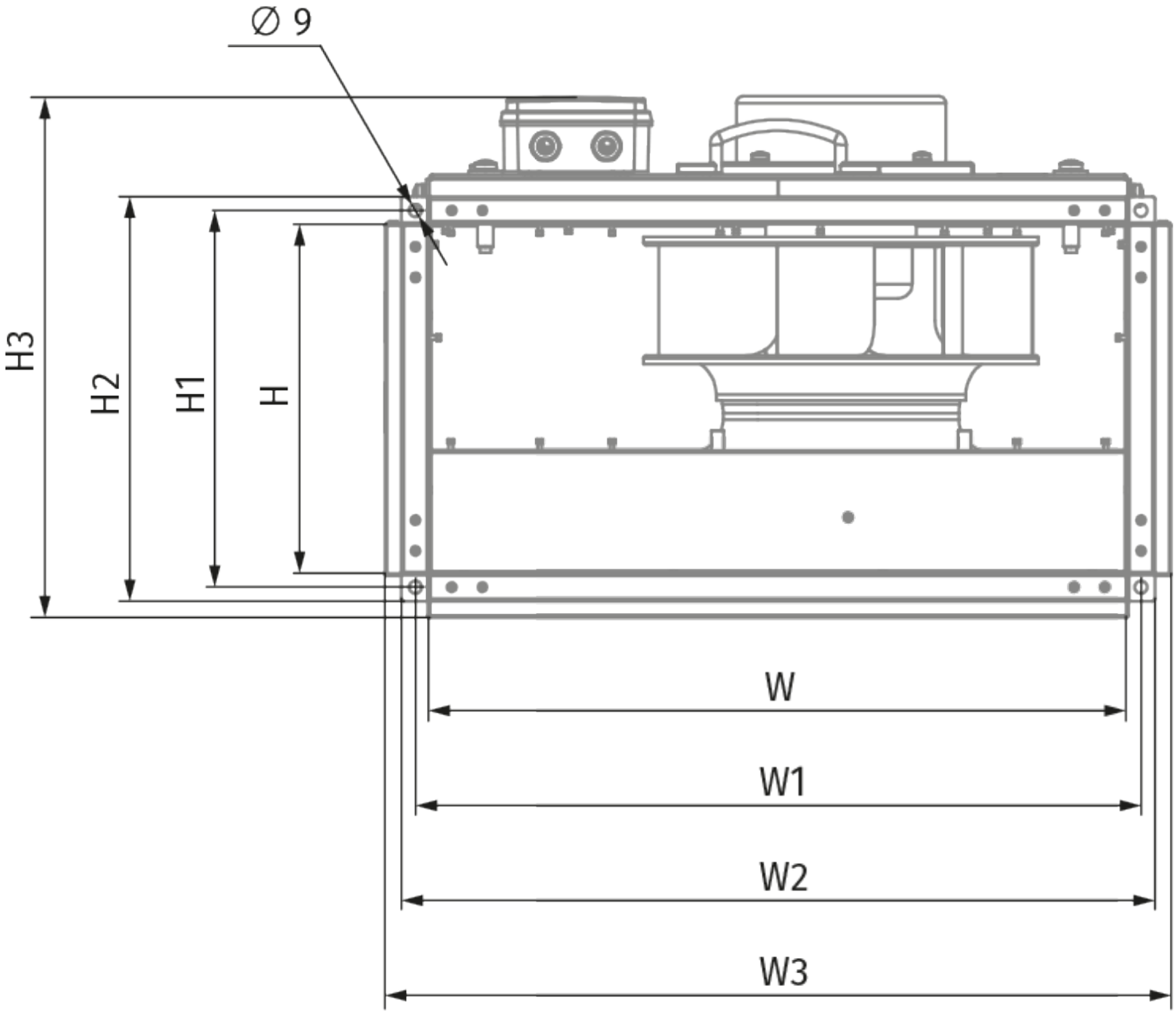
∅ 9
H3
H2
H1
H
W
W1
W2
W3

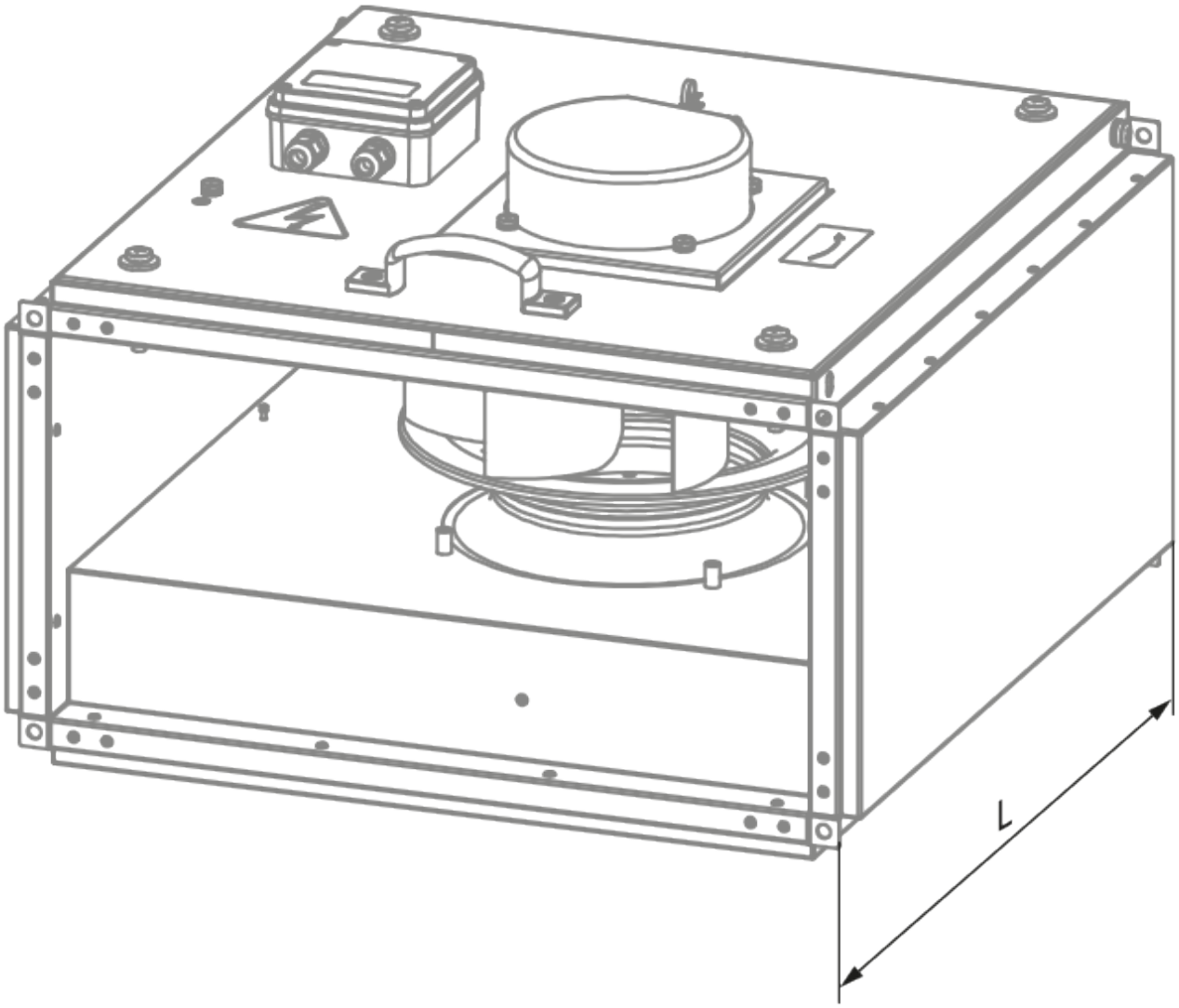
L

Ecodesign

Trademark	Blauberg
Model	Box-I EC 40x20-1 max
Type of ventilation unit	Unidirectional
Type of drive installed	Integrated VSD
Type of heat recovery system	None
Nominal external pressure (Pa)	504
Maximum external leakage rates (%)	2.7
Static efficiency (%)	54.2
Declared typology	NRVU UVU
Effective electric power input (kW)	0.174
Sound power level (dB(A))	50

Accessories

EC motors regulators

Name	Photo	Description
CDT E/0-10		Speed control for EC motors