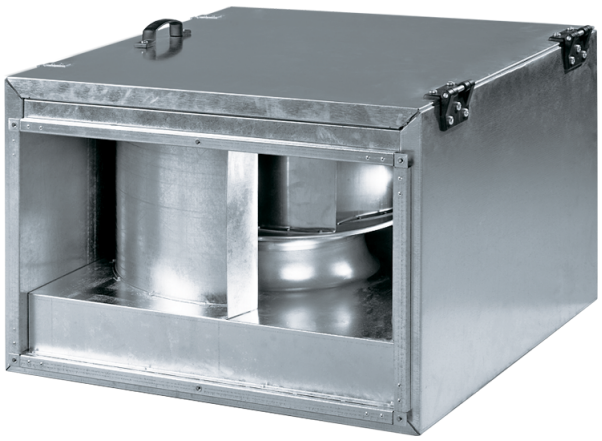

Box-I 60x35 4D (3~ 400 Y)

Centrifugal inline fans with backward curved blades in sound-insulated casings

- Sound-insulated casing
- Impeller type: Centrifugal impeller with backward curved blades
- Casing material: Galvanized steel
- Installation in any position

	Unit of measurement	Box-I 60x35 4D (3~ 400 Y)
Phases	-	3
Connection type	-	Y
Maximum supply voltage	V	400
Minimum supply voltage	V	400
Power supply frequency	Hz	50/60
Maximum airflow	m³/h	2660
Weight	kg	56.2
Transported air temperature (max)	°C	80
Transported air temperature (min)	°C	-30
Ingress protection rating	-	IPX4
Ingress protection rating of the drive	-	IP44
Impeller material	-	Aluminium

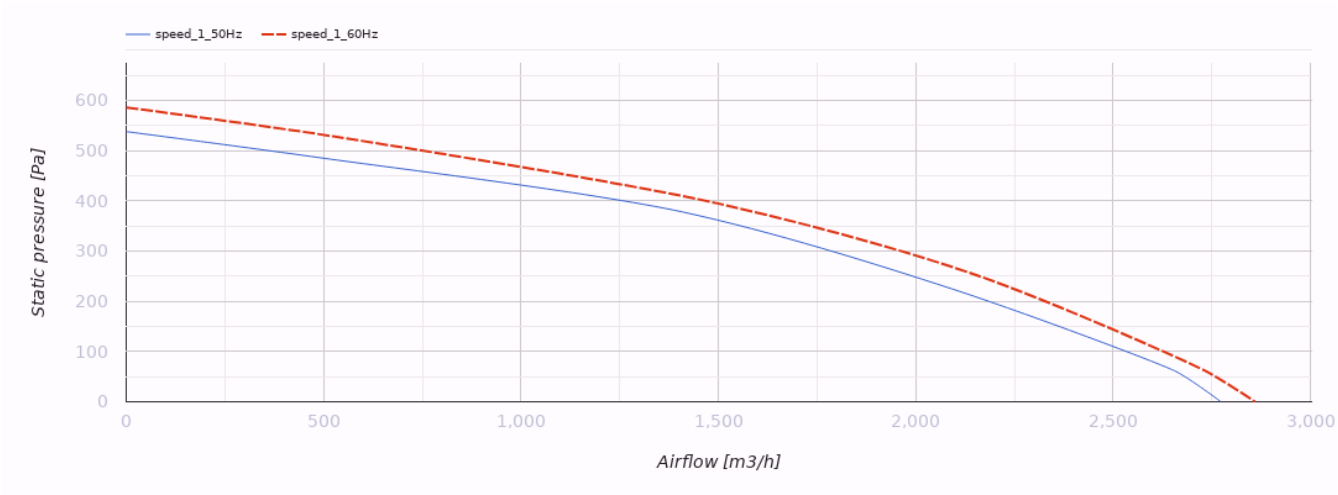

Dimensions

B	B1	B2	B3	H	H1	H2	H3	L
600	620	640	700	350	370	390	530	735

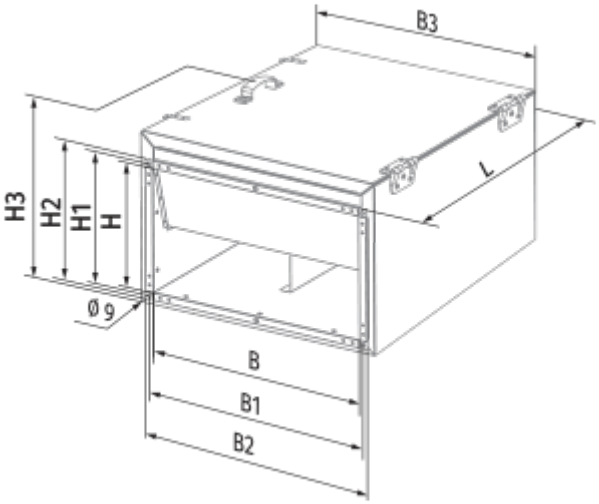

Accessories

Transformer speed controllers

Name	Photo	Description
CDR5E D1.5 M		Three phase speed controller
CDR5E D4.0 M		Three phase speed controller

CDR5E D6.0 M		Three phase speed controller
CDR5E D8.0 M		Three phase speed controller
CDR5E D11.0 M		Three phase speed controller
CDR5E D14.0 M		Three phase speed controller