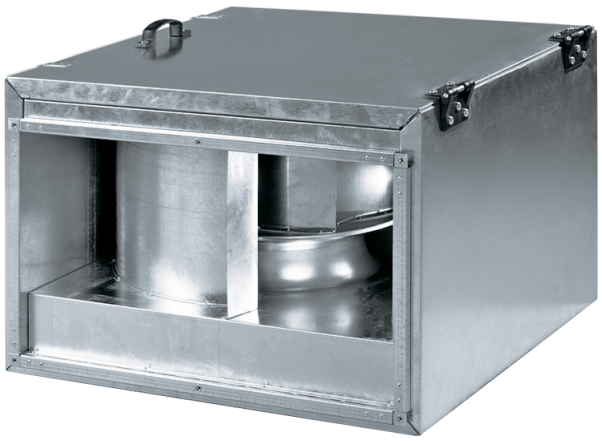

Box-I 50x30 4E

Centrifugal inline fans with backward curved blades in sound-insulated casings

- Sound-insulated casing
- Impeller type: Centrifugal impeller with backward curved blades
- Casing material: Galvanized steel
- Installation in any position

	Unit of measurement	Box-I 50x30 4E
Phases	-	1
Minimum supply voltage	V	220
Maximum supply voltage	V	240
Power supply frequency	Hz	50/60
Maximum airflow	m³/h	1700
Weight	kg	37.2
Transported air temperature (max)	°C	45
Transported air temperature (min)	°C	-25
Ingress protection rating	-	IPX4
Ingress protection rating of the drive	-	IP44
Impeller material	-	Aluminium

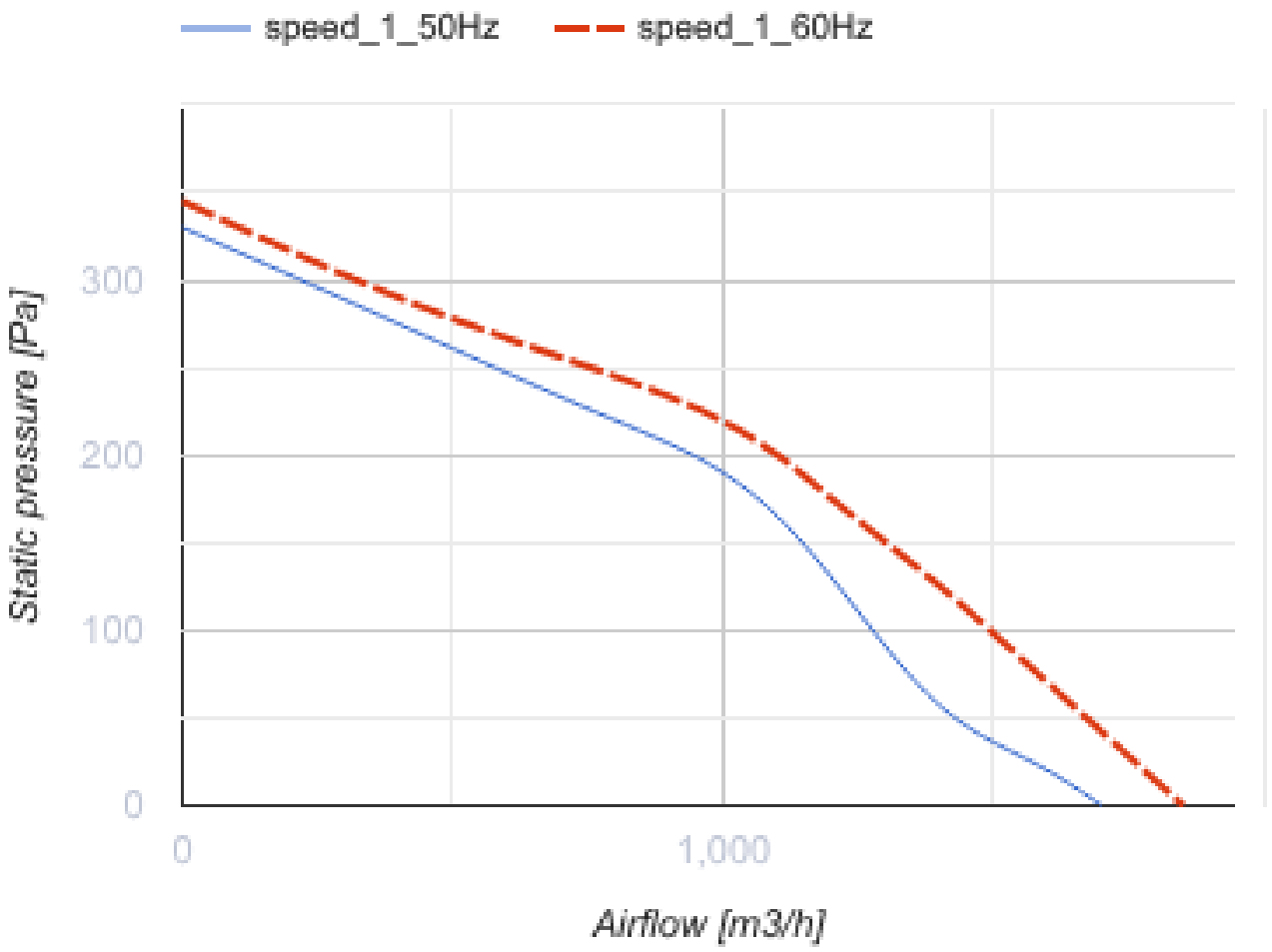
speed_1_50Hz
speed_1_60Hz
Static pressure [Pa]
300
200
100
0
0
1,000
Airflow [m3/h]

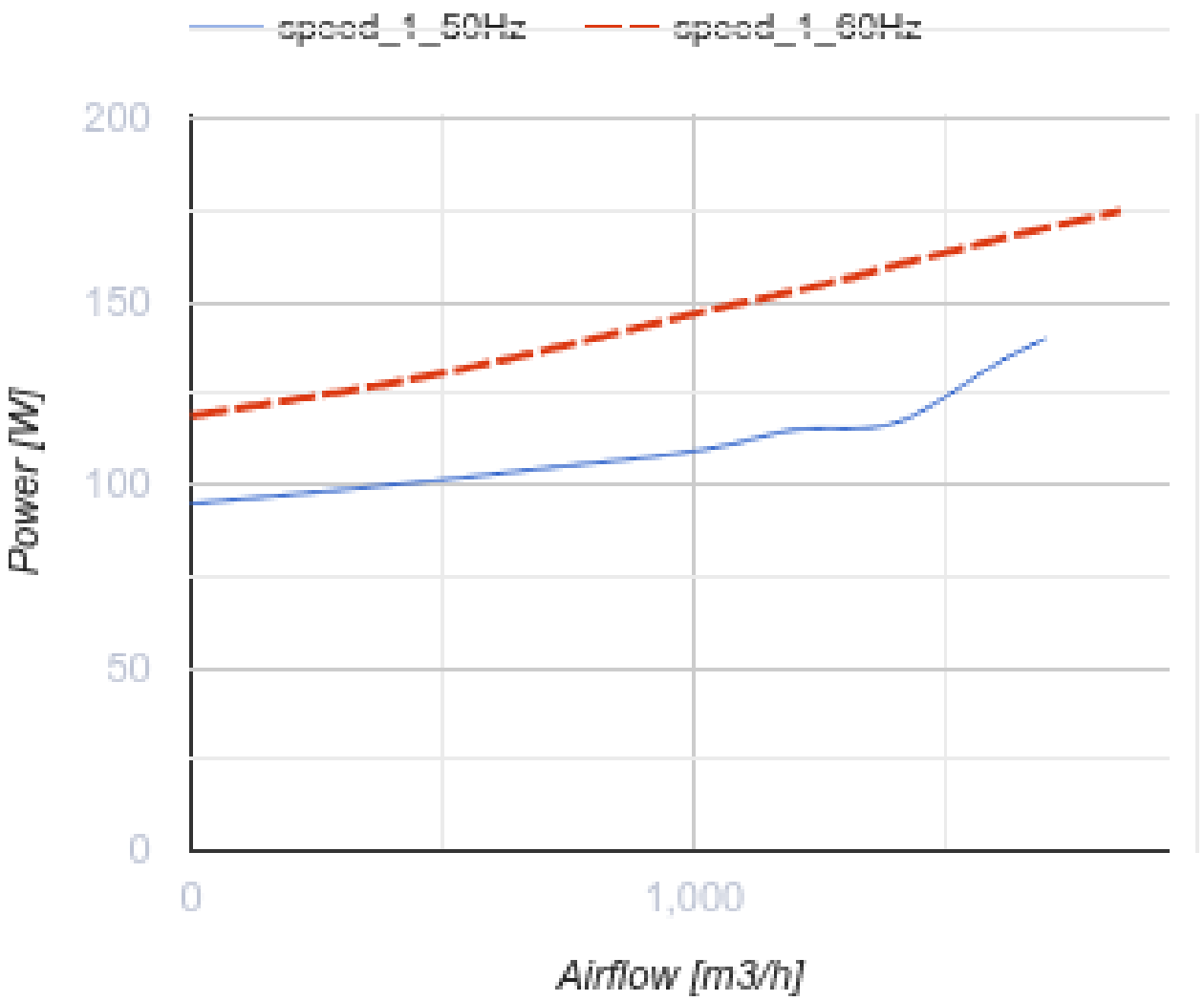

Dimensions

B	B1	B2	B3	H	H1	H2	H3	L
500	520	540	600	300	320	340	460	680

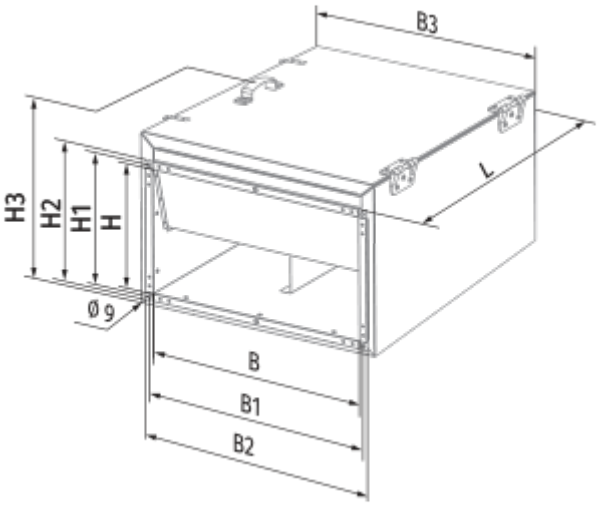
B3
L
H3
H2
H1
H
Ø 9
B
B1
B2

Ecodesign

Trademark	Blauberg
Model	Box-I 50x30 4E
Type of ventilation unit	Unidirectional
Type of drive installed	External MSD or VSD
Type of heat recovery system	None
Nominal external pressure (Pa)	200
Maximum external leakage rates (%)	2.7
Static efficiency (%)	49.7
Declared typology	NRVU UVU
Effective electric power input (kW)	0.107
Sound power level (dB(A))	65

Accessories

Transformer speed controllers

Name	Photo	Description
CDR5E D1.5 M		Three phase speed controller
CDR5E D4.0 M		Three phase speed controller
CDR5E D6.0 M		Three phase speed controller
CDR5E D8.0 M		Three phase speed controller
CDR5E D11.0 M		Three phase speed controller
CDR5E D14.0 M		Three phase speed controller