

Box-FI 50x30 4E

Centrifugal inline fans with forward curved blades in sound-insulated casings

- Sound-insulated casing
- Impeller type: Centrifugal impeller with forward curved blades
- Casing material: Galvanized steel
- Installation in any position

	Unit of measurement	Box-FI 50x30 4E
Phases	-	1
Minimum supply voltage	V	230
Maximum supply voltage	V	230
Power supply frequency	Hz	50
Maximum airflow	m^3/h	2350
Weight	kg	52.5
Transported air temperature (max)	°C	70
Transported air temperature (min)	°C	-25
Ingress protection rating	-	IPX4
Ingress protection rating of the drive	-	IP44
Impeller material	-	Galvanized steel

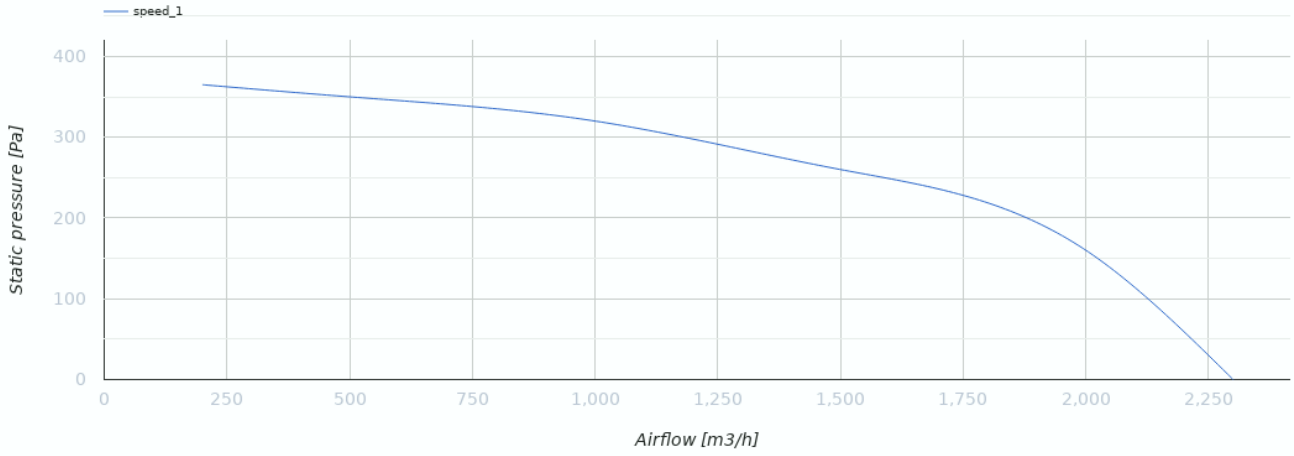

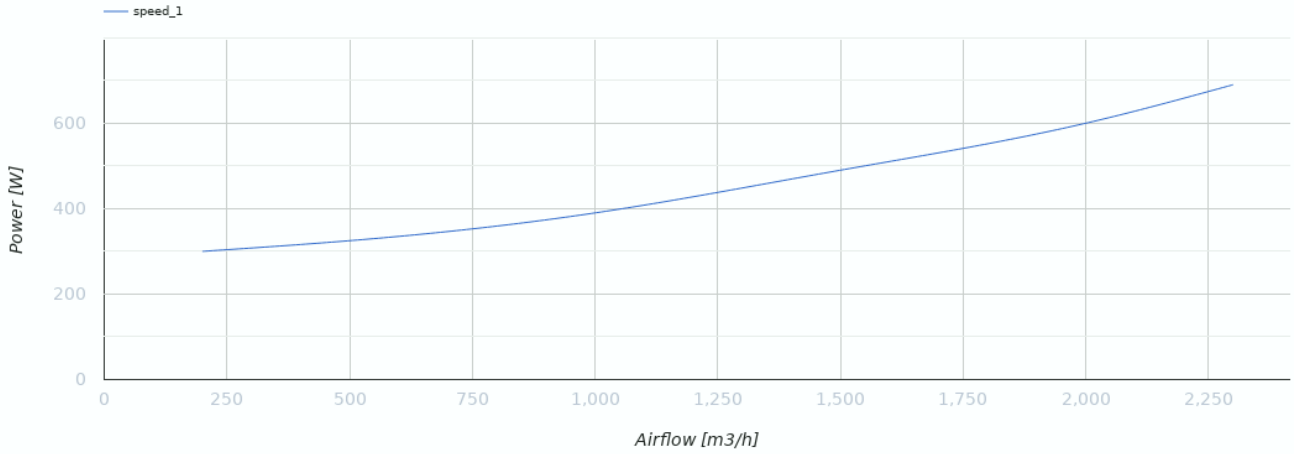

Dimensions

B	B1	B2	B3	H	H1	H2	H3	L
500	520	540	570	300	320	340	460	680

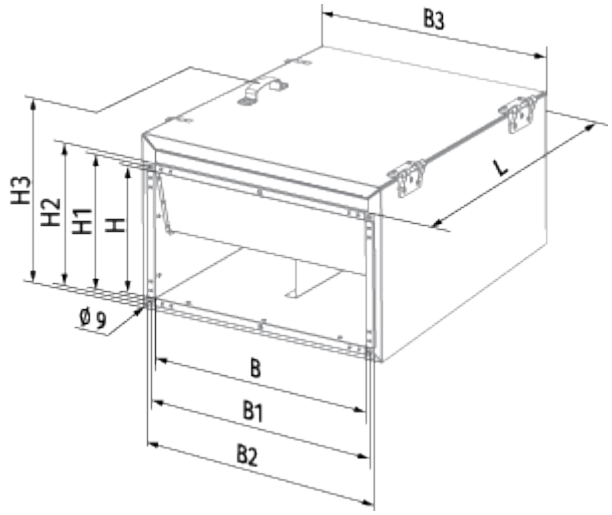

Ecodesign

Trademark	Blauberg
Model	Box-FI 50x30 4E
Type of drive installed	External MSD or VSD
Type of heat recovery system	None
Nominal external pressure (Pa)	290
Maximum external leakage rates (%)	2.7
Static efficiency (%)	23.7
Declared typology	NRVU UVU
Effective electric power input (kW)	0.445
Sound power level (dB(A))	67

Accessories

For rectangular ducts

Name	Photo	Description
SD 50x30	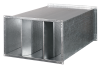	Silencers for rectangular ducts

For rectangular ducts

Name	Photo	Description
KFBK 50x30		Filter boxes with panel filter for rectangular ducts
KFBT 50x30 G4		Filter boxes with pocket filters for rectangular ducts
KFBT 50x30 F5		Filter boxes with pocket filters for rectangular ducts
KFBT 50x30 F7		Filter boxes with pocket filters for rectangular ducts

For rectangular ducts

Name	Photo	Description
VG 50x30		Gravity dampers

For rectangular ducts

Name	Photo	Description
EVA 50x30		Flexible anti-vibration connectors for rectangular ducts

Water heaters

Name	Photo	Description
WKH 50x30-2		Duct water heaters for rectangular ducts
WKH 50x30-4		Duct water heaters for rectangular ducts

Electrical heaters

Name	Photo	Description
EKH 50x30-6		Duct electrical heaters for rectangular ducts
EKH 50x30-7.5		Duct electrical heaters for rectangular ducts
EKH 50x30-9		Duct electrical heaters for rectangular ducts
EKH 50x30-10.5		Duct electrical heaters for rectangular ducts
EKH 50x30-12		Duct electrical heaters for rectangular ducts
EKH 50x30-15		Duct electrical heaters for rectangular ducts
EKH 50x30-18		Duct electrical heaters for rectangular ducts

EKH 50x30-21		Duct electrical heaters for rectangular ducts

Airflow regulators

Name	Photo	Description
SL 50x30		Air dampers for rectangular ducts

Transformer speed controllers

Name	Photo	Description
CDR5E D1.5 M		Three phase speed controller
CDR5E D4.0 M		Three phase speed controller
CDR5E D6.0 M		Three phase speed controller
CDR5E D8.0 M		Three phase speed controller
CDR5E D11.0 M		Three phase speed controller
CDR5E D14.0 M		Three phase speed controller