

Box-FI 40x20 4D

Centrifugal inline fans with forward curved blades in sound-insulated casings

- Sound-insulated casing
- Impeller type: Centrifugal impeller with forward curved blades
- Casing material: Galvanized steel
- Installation in any position

	Unit of measurement	Box-FI 40x20 4D
Phases	-	3
Minimum supply voltage	V	400
Maximum supply voltage	V	400
Power supply frequency	Hz	50
Maximum airflow	m^3/h	1470
Weight	kg	29
Transported air temperature (max)	°C	45
Transported air temperature (min)	°C	-25
Ingress protection rating	-	IPX4
Ingress protection rating of the drive	-	IP44
Impeller material	-	Galvanized steel

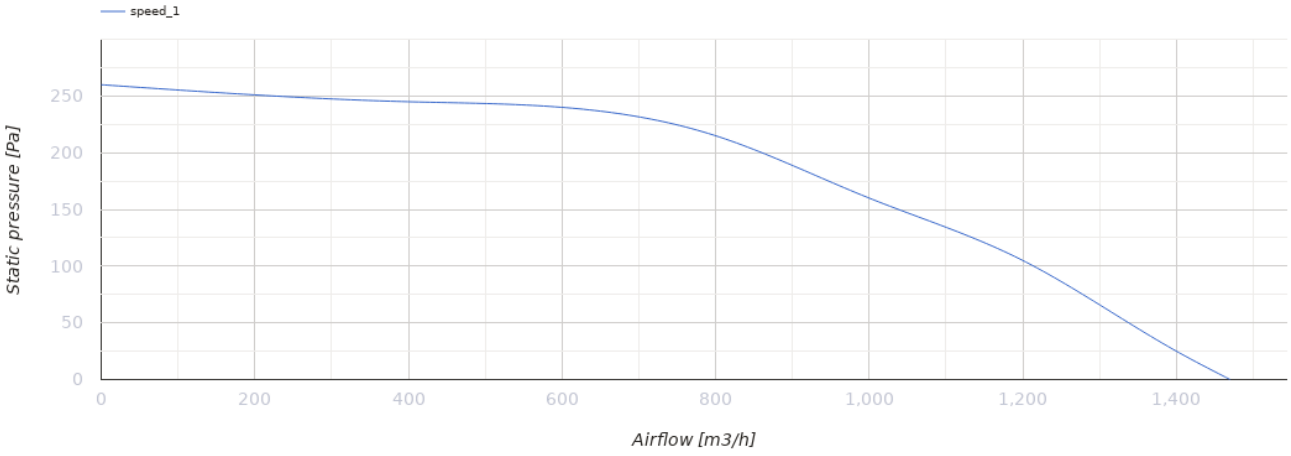

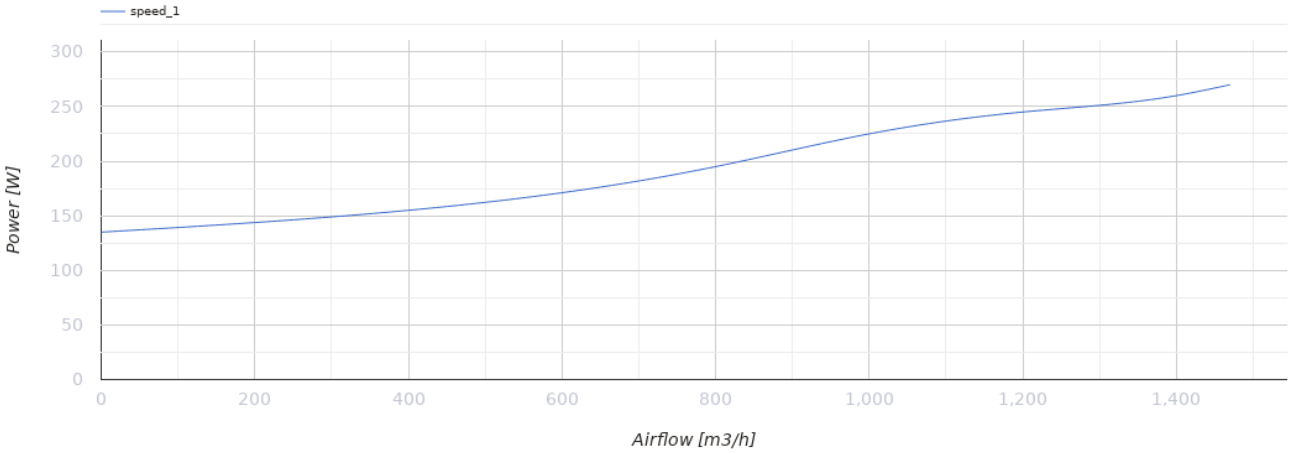

Dimensions

B	B1	B2	B3	H	H1	H2	H3	L
400	420	440	470	200	220	240	360	500

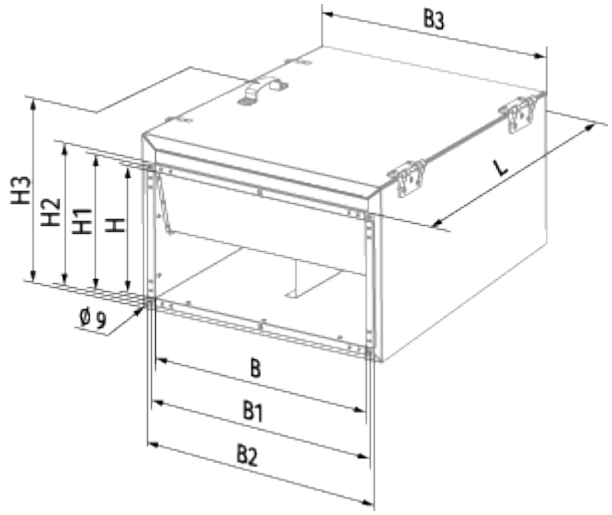

Ecodesign

Trademark	Blauberg
Model	Box-FI 40x20 4D
Type of drive installed	External MSD or VSD
Type of heat recovery system	None
Nominal external pressure (Pa)	218
Maximum external leakage rates (%)	2.7
Static efficiency (%)	25
Declared typology	NRVU UVU
Effective electric power input (kW)	0.195
Sound power level (dB(A))	63

Accessories

For rectangular ducts

Name	Photo	Description
SD 40x20	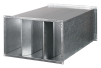	Silencers for rectangular ducts

For rectangular ducts

Name	Photo	Description
KFBK 40x20		Filter boxes with panel filter for rectangular ducts
KFBT 40x20 G4		Filter boxes with pocket filters for rectangular ducts
KFBT 40x20 F5		Filter boxes with pocket filters for rectangular ducts
KFBT 40x20 F7		Filter boxes with pocket filters for rectangular ducts

For rectangular ducts

Name	Photo	Description
VG 40x20		Gravity dampers

For rectangular ducts

Name	Photo	Description
EVA 40x20		Flexible anti-vibration connectors for rectangular ducts

Water heaters

Name	Photo	Description
WKH 40x20-2		Duct water heaters for rectangular ducts
WKH 40x20-4		Duct water heaters for rectangular ducts

Electrical heaters

Name	Photo	Description
EKH 40x20-4.5		Duct electrical heaters for rectangular ducts
EKH 40x20-6		Duct electrical heaters for rectangular ducts
EKH 40x20-7.5		Duct electrical heaters for rectangular ducts
EKH 40x20-9		Duct electrical heaters for rectangular ducts
EKH 40x20-10.5		Duct electrical heaters for rectangular ducts
EKH 40x20-12		Duct electrical heaters for rectangular ducts

EKH 40x20-15		Duct electrical heaters for rectangular ducts

Airflow regulators

Name	Photo	Description
SL 40x20		Air dampers for rectangular ducts

Transformer speed controllers

Name	Photo	Description
CDR5E D1.5 M		Three phase speed controller
CDR5E D4.0 M		Three phase speed controller
CDR5E D6.0 M		Three phase speed controller
CDR5E D8.0 M		Three phase speed controller
CDR5E D11.0 M		Three phase speed controller
CDR5E D14.0 M		Three phase speed controller