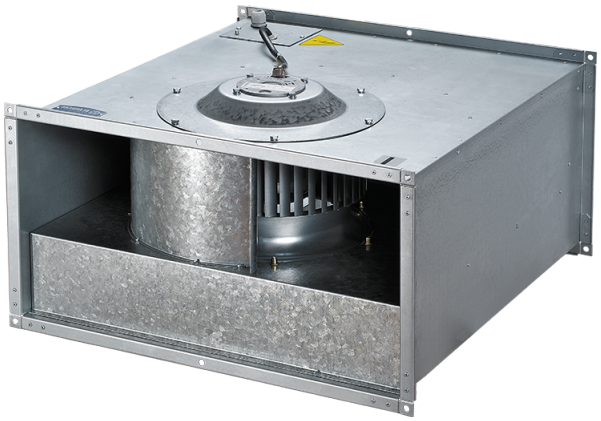

Box-F 600x350 4E

Centrifugal inline fans with forward curved blades

• Impeller type: Centrifugal impeller with forward curved blades
• Casing material: Galvanized steel
• Installation in any position

	Unit of measurement	Box-F 600x350 4E
Phases	-	1
Minimum supply voltage	V	230
Maximum supply voltage	V	230
Power supply frequency	Hz	50
Maximum airflow	m³/h	4260
Weight	kg	49.5
Transported air temperature (max)	°C	40
Transported air temperature (min)	°C	-20
Ingress protection rating	-	IPX4
Ingress protection rating of the drive	-	IP44
Impeller material	-	Galvanized steel

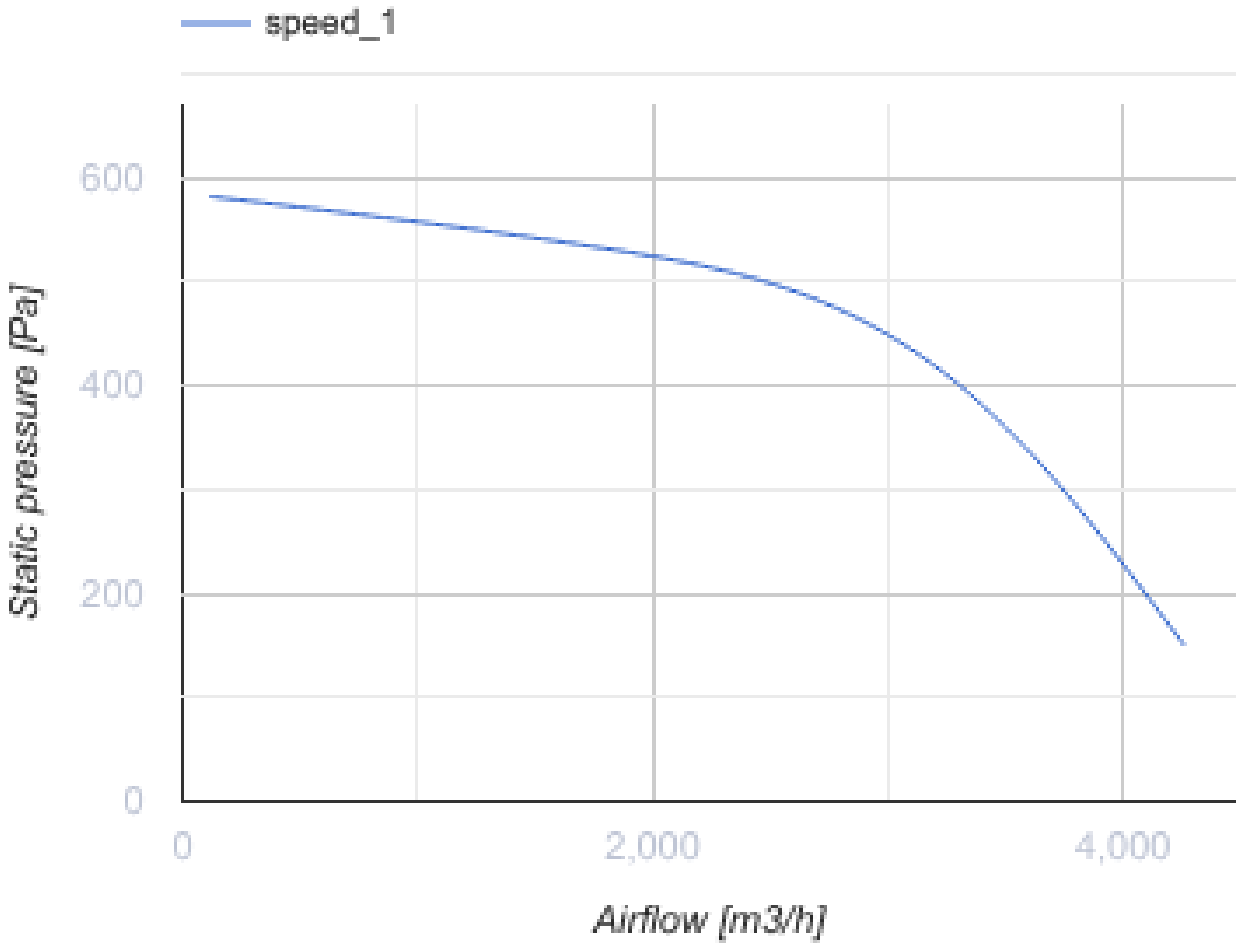
speed_1
600
400
200
0
Static pressure [Pa]
0
2,000
4,000
Airflow [m3/h]

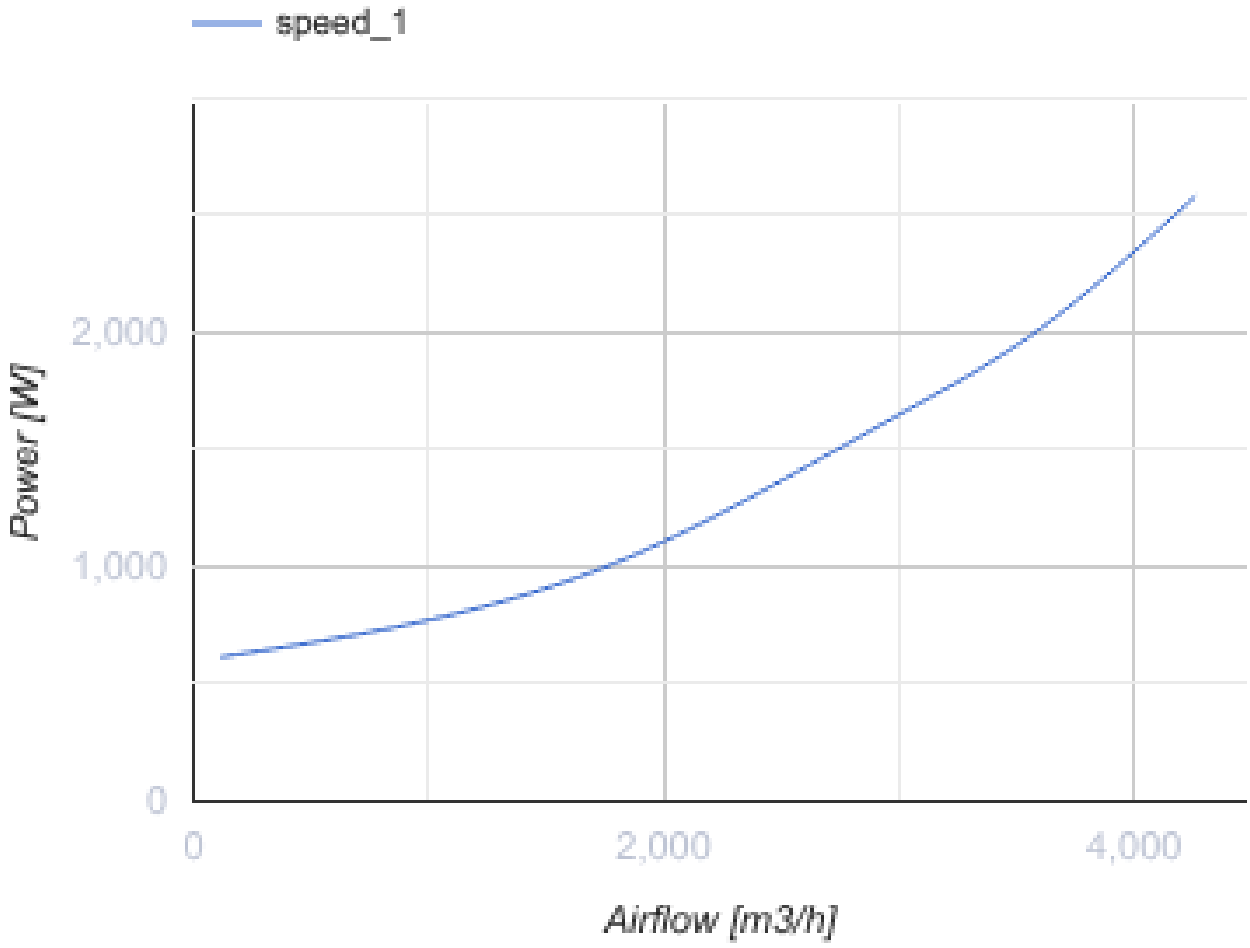

Dimensions

B	B1	B2	H	H1	H2	H3	L
600	620	640	350	370	390	425	735

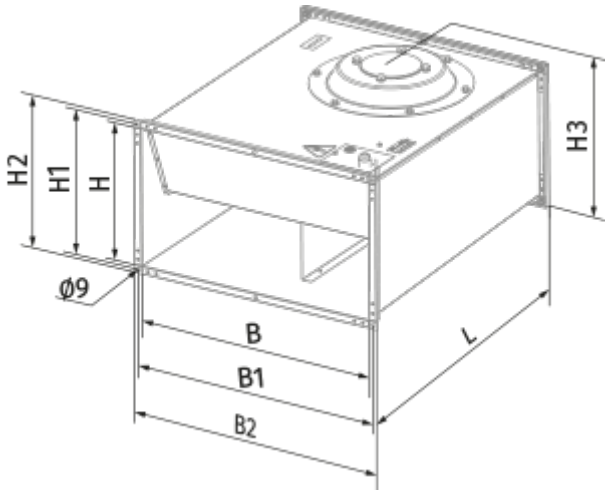
H2
H1
H
H3
Ø9
B
B1
B2
L

Ecodesign

Trademark	Blauberg
Model	Box-F 600x350 4E
Type of drive installed	External MSD or VSD
Type of heat recovery system	None
Nominal external pressure (Pa)	521
Maximum external leakage rates (%)	2.7
Static efficiency (%)	26.8
Declared typology	NRVU UVU
Effective electric power input (kW)	1.11
Sound power level (dB(A))	79

Accessories

Transformer speed controllers

Name	Photo	Description
CDR5E D1.5 M		Three phase speed controller
CDR5E D4.0 M		Three phase speed controller
CDR5E D6.0 M		Three phase speed controller
CDR5E D8.0 M		Three phase speed controller
CDR5E D11.0 M		Three phase speed controller
CDR5E D14.0 M		Three phase speed controller