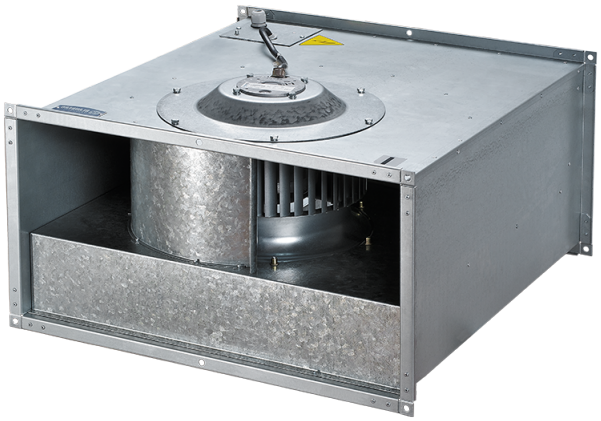

Box-F 600x300 4E

Centrifugal inline fans with forward curved blades

• Impeller type: Centrifugal impeller with forward curved blades
• Casing material: Galvanized steel
• Installation in any position

	Unit of measurement	Box-F 600x300 4E
Phases	-	1
Minimum supply voltage	V	230
Maximum supply voltage	V	230
Power supply frequency	Hz	50
Maximum airflow	m³/h	2950
Weight	kg	35
Transported air temperature (max)	°C	50
Transported air temperature (min)	°C	-25
Ingress protection rating	-	IPX4
Ingress protection rating of the drive	-	IP44
Impeller material	-	Galvanized steel

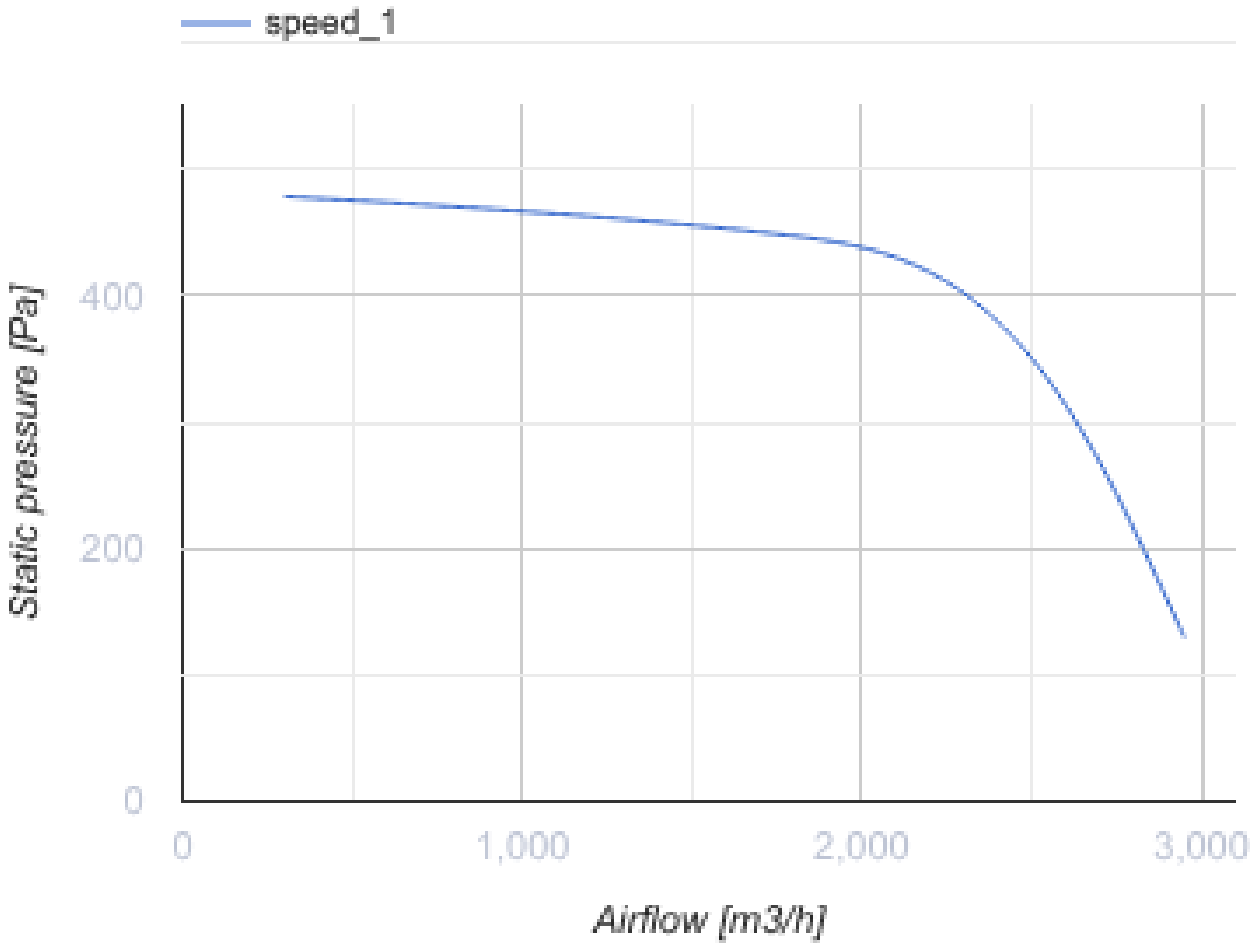
speed_1
Static pressure [Pa]
400
200
0
0
1,000
2,000
3,000
Airflow [m3/h]

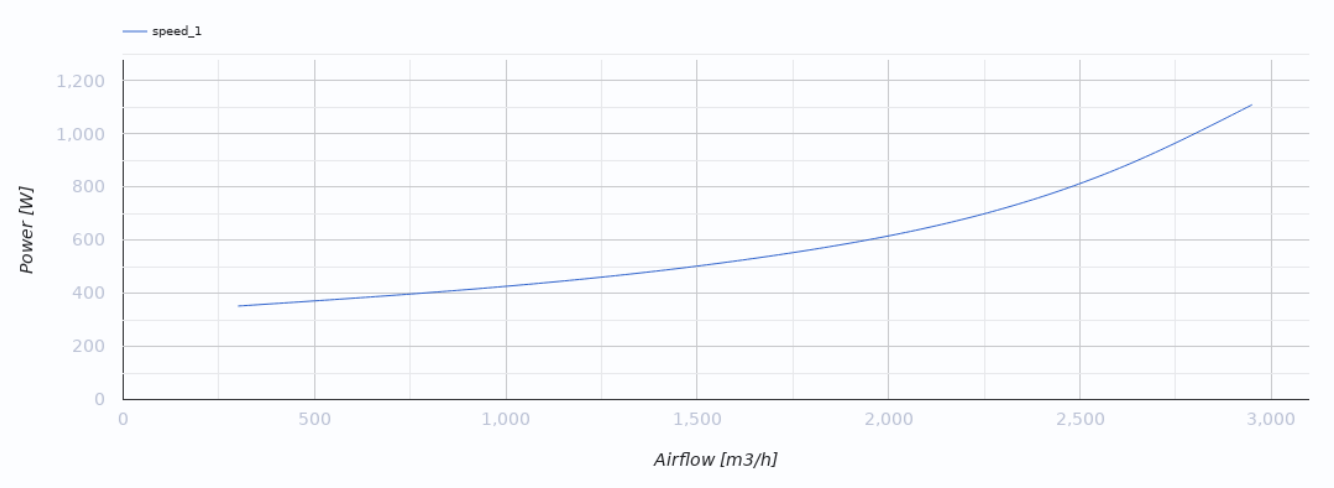
speed_1
Power [W]
1,200
1,000
800
600
400
200
0
0
500
1,000
1,500
2,000
2,500
3,000
Airflow [m3/h]

Dimensions

B	B1	B2	H	H1	H2	H3	L
600	620	640	300	320	340	375	680

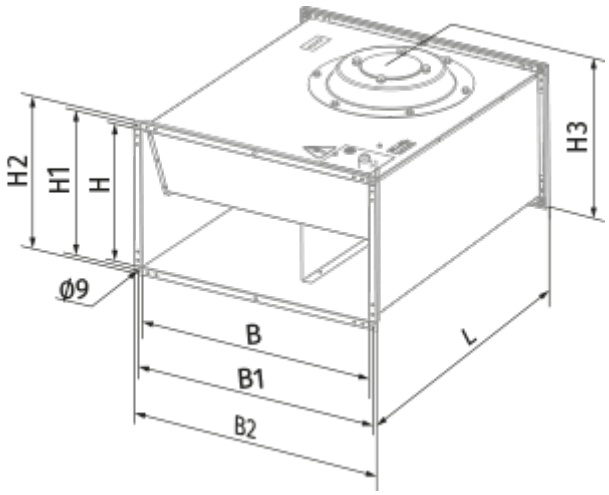

Ecodesign

Trademark	Blauberg
Model	Box-F 600x300 4E
Type of drive installed	External MSD or VSD
Type of heat recovery system	None
Nominal external pressure (Pa)	473
Maximum external leakage rates (%)	2.7
Static efficiency (%)	34.4
Declared typology	NRVU UVU
Effective electric power input (kW)	0.555
Sound power level (dB(A))	79

Accessories

Transformer speed controllers

Name	Photo	Description
CDR5E D1.5 M		Three phase speed controller
CDR5E D4.0 M		Three phase speed controller
CDR5E D6.0 M		Three phase speed controller
CDR5E D8.0 M		Three phase speed controller
CDR5E D11.0 M		Three phase speed controller
CDR5E D14.0 M		Three phase speed controller