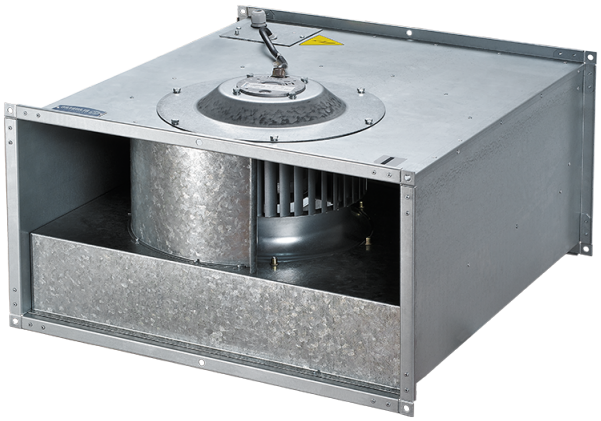

Box-F 500x300 4E

Centrifugal inline fans with forward curved blades

• Impeller type: Centrifugal impeller with forward curved blades
• Casing material: Galvanized steel
• Installation in any position

	Unit of measurement	Box-F 500x300 4E
Phases	-	1
Minimum supply voltage	V	230
Maximum supply voltage	V	230
Power supply frequency	Hz	50
Maximum airflow	m³/h	2350
Weight	kg	33
Transported air temperature (max)	°C	70
Transported air temperature (min)	°C	-25
Ingress protection rating	-	IPX4
Ingress protection rating of the drive	-	IP44
Impeller material	-	Galvanized steel

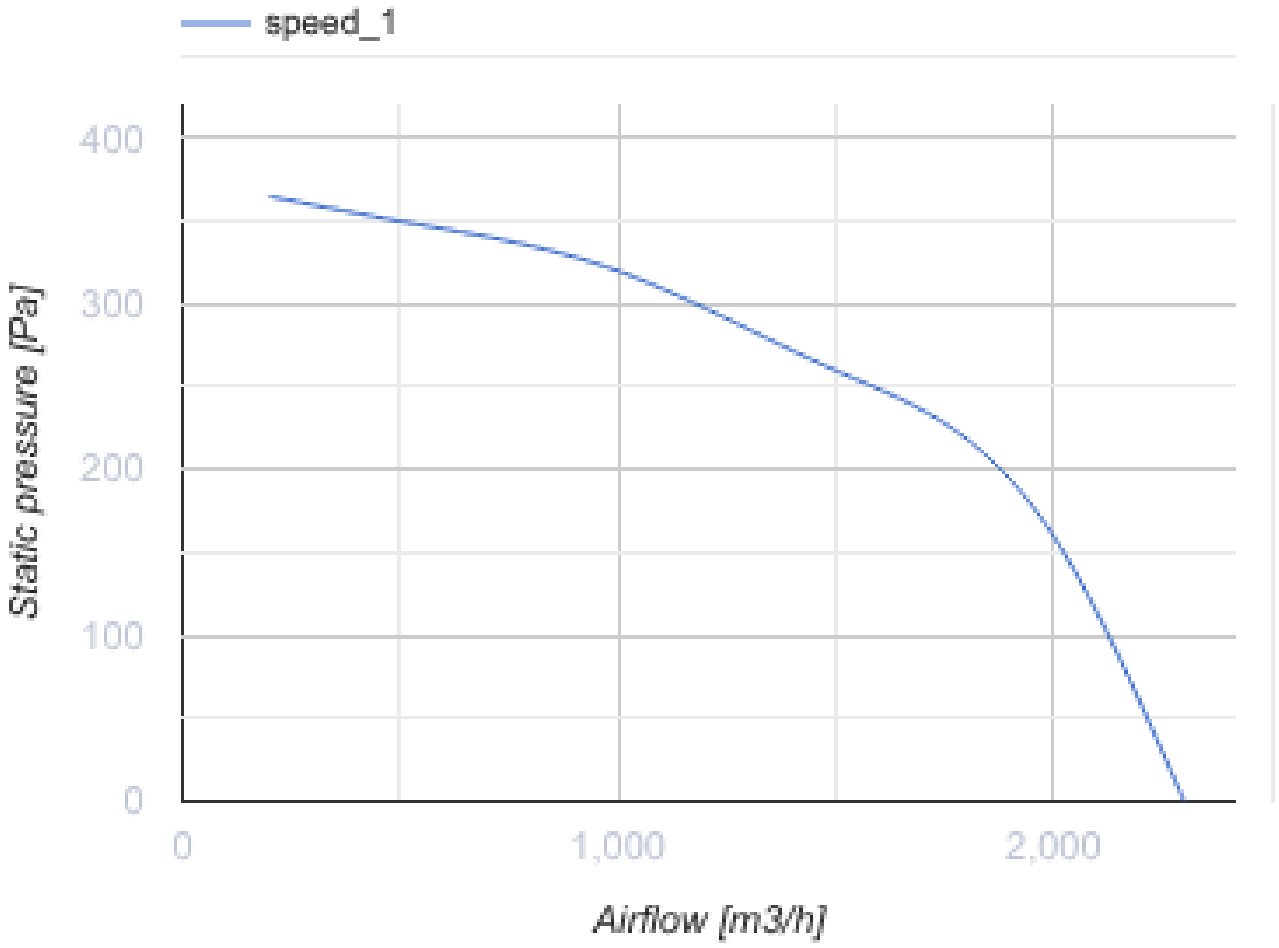
speed_1
400
300
200
100
0
Static pressure [Pa]
0
1,000
2,000
Airflow [m3/h]

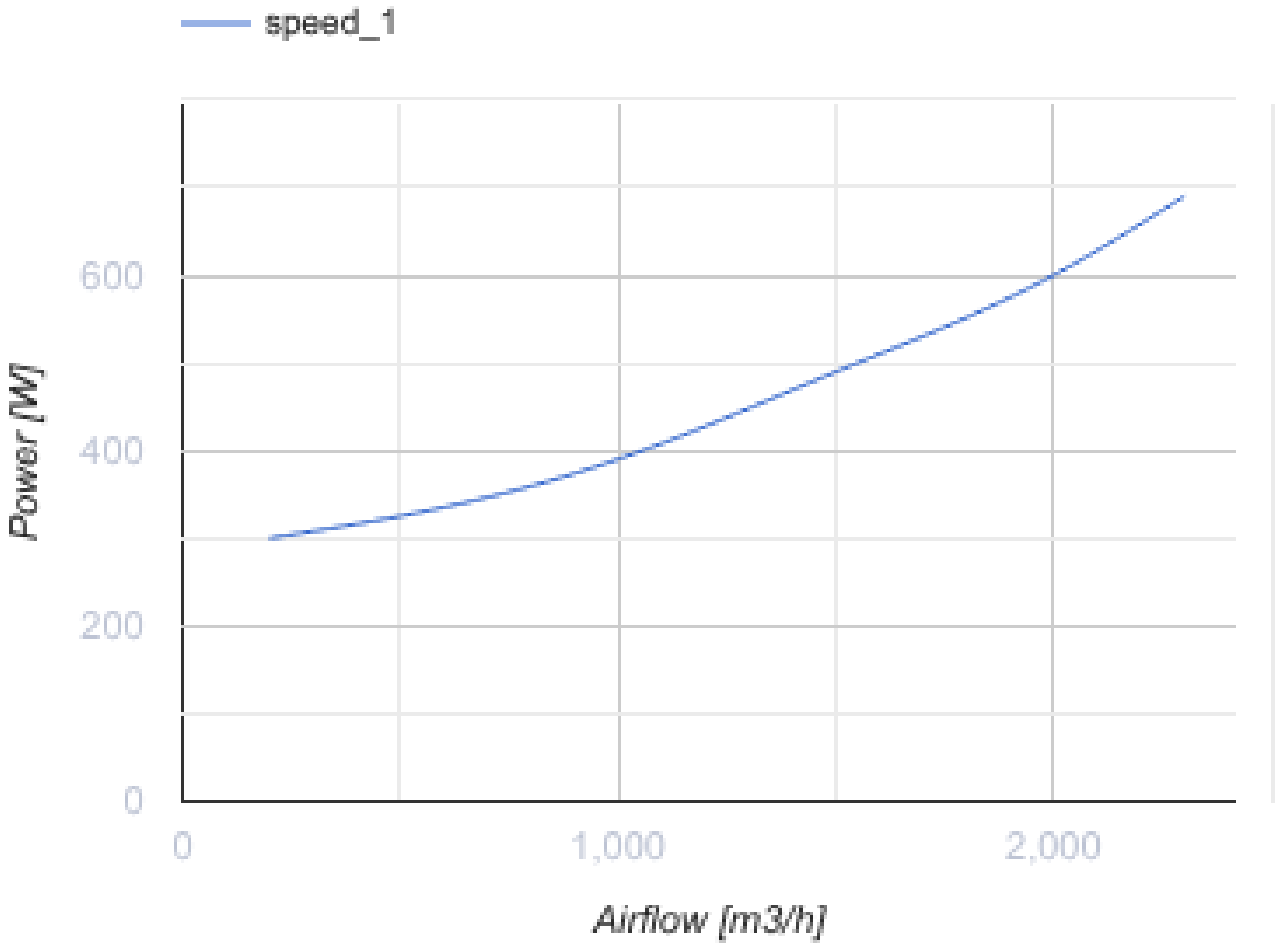

Dimensions

B	B1	B2	H	H1	H2	H3	L
500	520	540	300	320	340	365	680

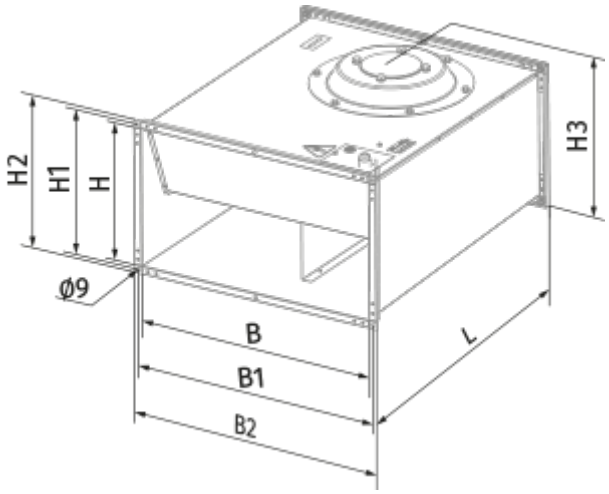
H2
H1
H
H3
Ø9
B
B1
B2
L

Ecodesign

Trademark	Blauberg
Model	Box-F 500x300 4E
Type of drive installed	External MSD or VSD
Type of heat recovery system	None
Nominal external pressure (Pa)	290
Maximum external leakage rates (%)	2.7
Static efficiency (%)	23.7
Declared typology	NRVU UVU
Effective electric power input (kW)	0.445
Sound power level (dB(A))	77

Accessories

Transformer speed controllers

Name	Photo	Description
CDR5E D1.5 M		Three phase speed controller
CDR5E D4.0 M		Three phase speed controller
CDR5E D6.0 M		Three phase speed controller
CDR5E D8.0 M		Three phase speed controller
CDR5E D11.0 M		Three phase speed controller
CDR5E D14.0 M		Three phase speed controller