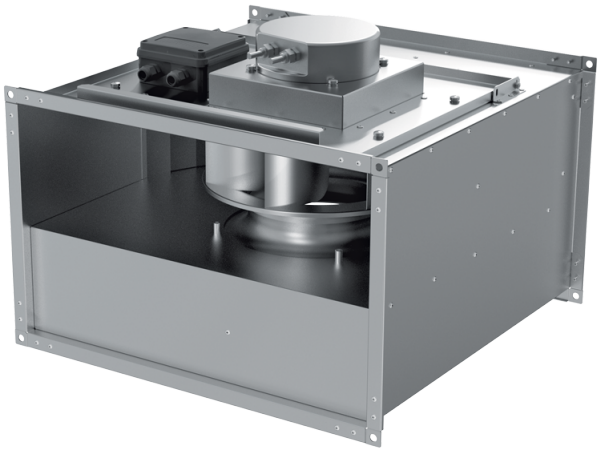

Box EC 70x40-3 max

Centrifugal inline fans with backward curved blades with EC-motors

• Impeller type: Centrifugal impeller with backward curved blades
• Casing material: Galvanized steel
• Installation in any position

	Unit of measurement	Box EC 70x40-3 max
Phases	-	3
Minimum supply voltage	V	400
Maximum supply voltage	V	400
Power supply frequency	Hz	50/60
Maximum airflow	m³/h	6810
Weight	kg	43
Transported air temperature (max)	°C	50
Transported air temperature (min)	°C	-25
Ingress protection rating	-	IPX4
Ingress protection rating of the drive	-	IP54
Impeller material	-	Aluminium

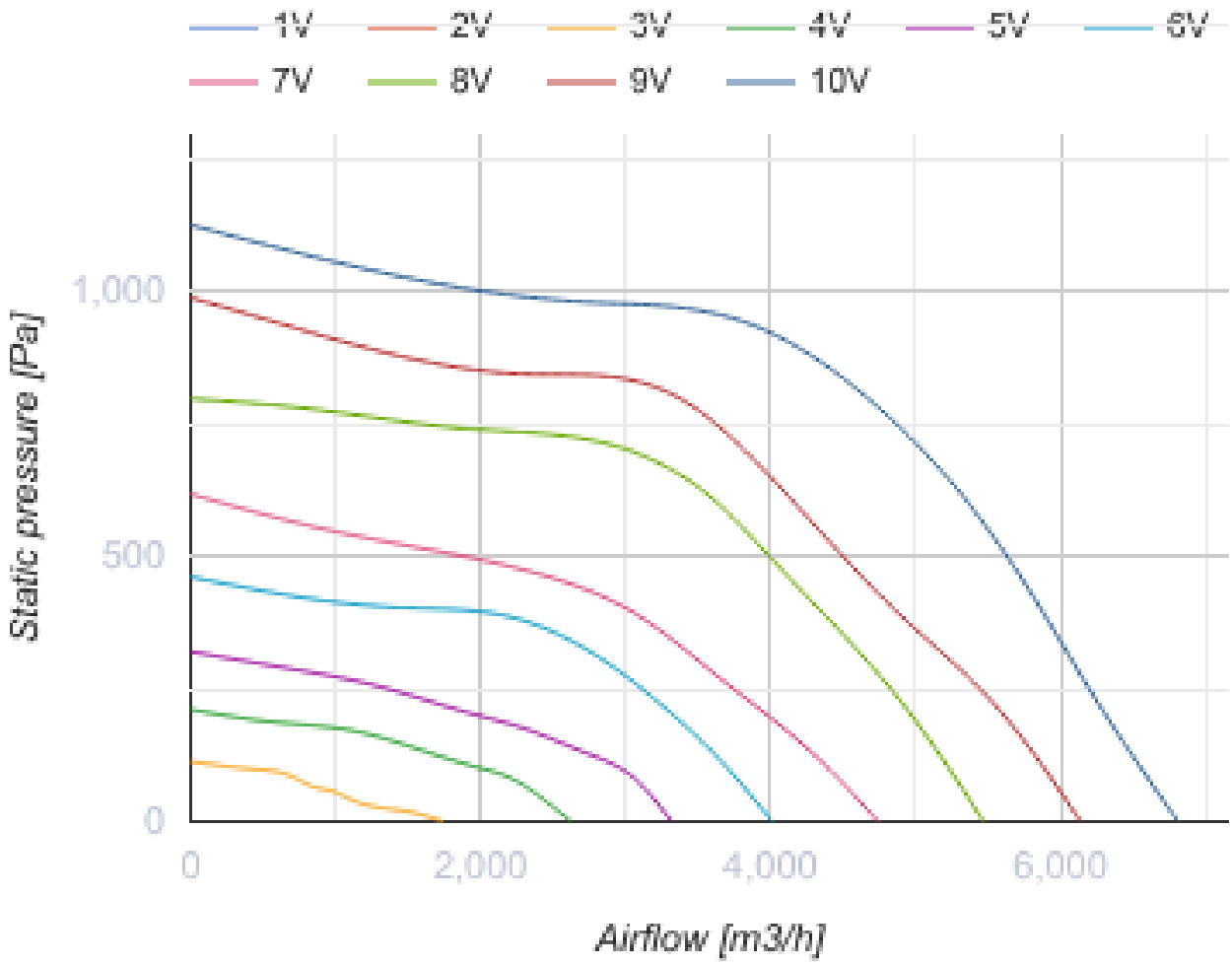
1V
2V
3V
4V
5V
6V
7V
8V
9V
10V
Static pressure [Pa]
1,000
500
0
0
2,000
4,000
6,000
Airflow [m3/h]

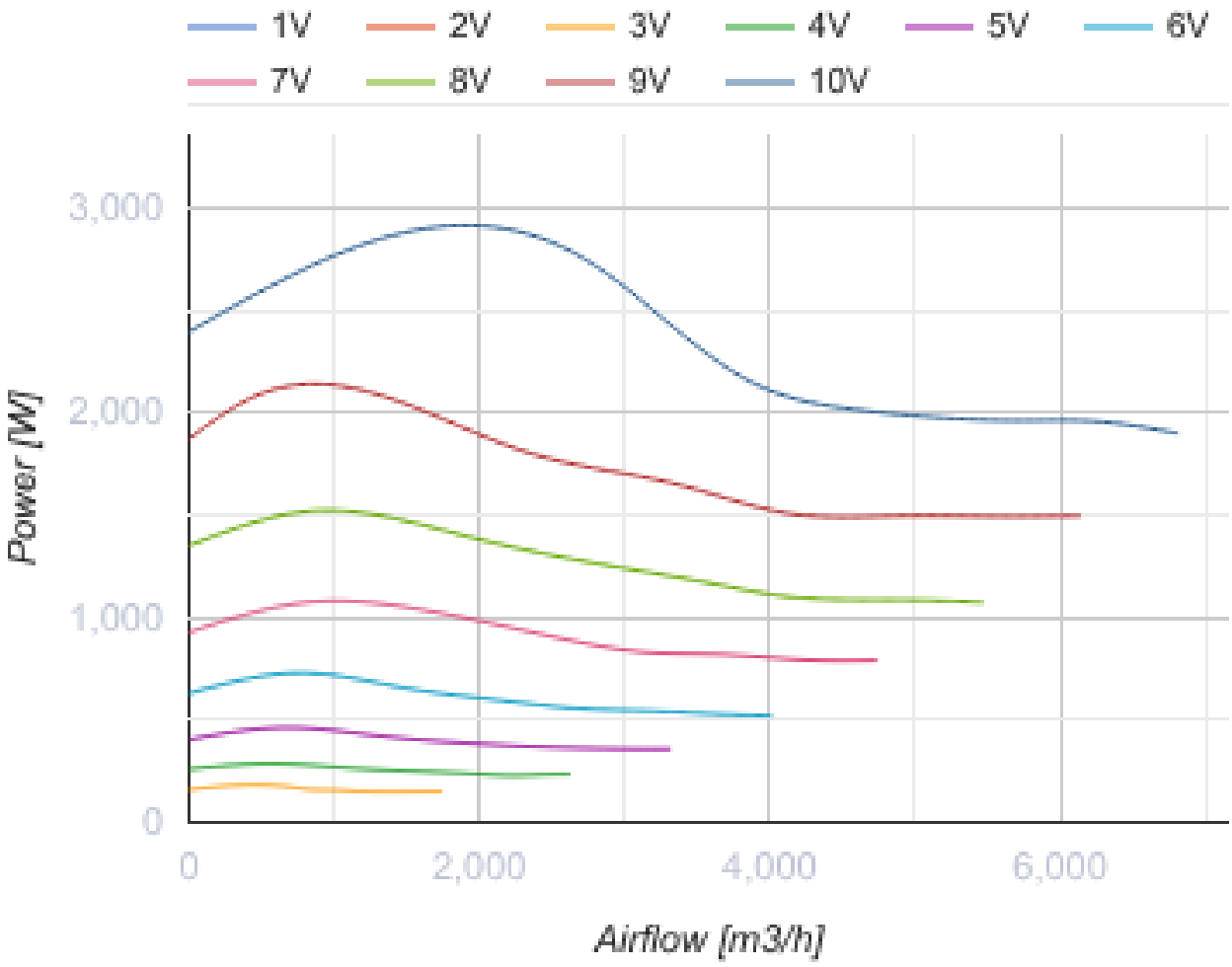

Dimensions

H	H1	H2	H3	L	W	W1	W2
400	420	440	555	750	700	720	740

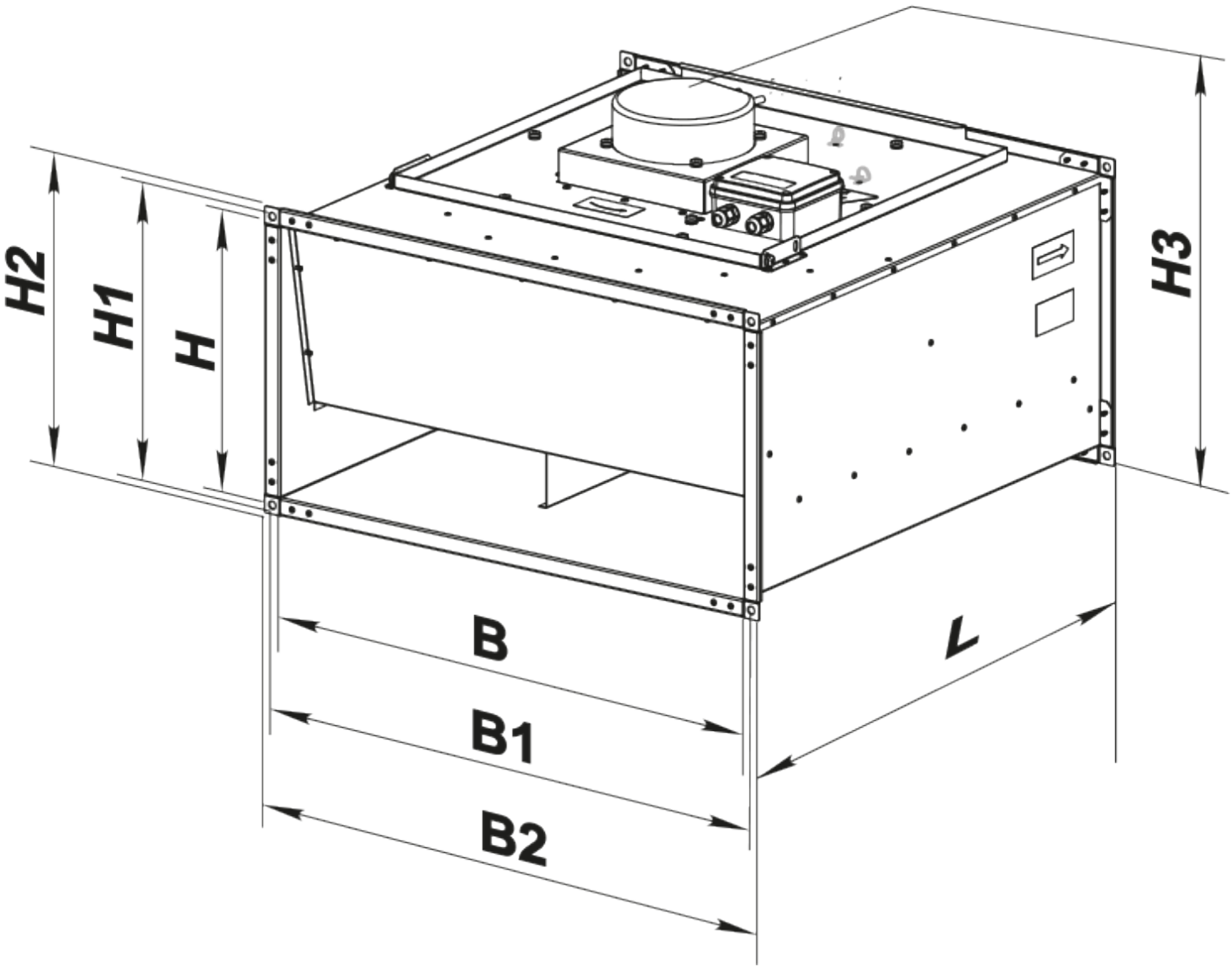
H2
H1
H
H3
B
B1
B2
L

Ecodesign

Trademark	Blauberg
Model	Box EC 70x40-3 max
Type of ventilation unit	Unidirectional
Type of drive installed	Integrated VSD
Type of heat recovery system	None
Nominal external pressure (Pa)	601
Maximum external leakage rates (%)	2.7
Static efficiency (%)	57.7
Declared typology	NRVU UVU
Effective electric power input (kW)	1.161
Sound power level (dB(A))	77

Accessories

EC motors regulators

Name	Photo	Description
CDT E/0-10		Speed control for EC motors