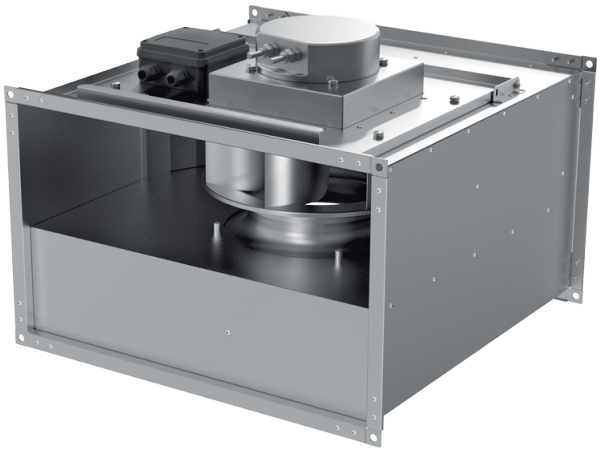

# Box EC 60x35-1

Centrifugal inline fans with backward curved blades with EC-motors

• Impeller type: Centrifugal impeller with backward curved blades
• Casing material: Galvanized steel
• Installation in any position

| | Unit of measurement | Box EC 60x35-1 |
|---|---|---|
| Phases | - | 1 |
| Maximum supply voltage | V | 230 |
| Minimum supply voltage | V | 230 |
| Power supply frequency | Hz | 50/60 |
| Maximum airflow | m³/h | 2815 |
| Weight | kg | 25.2 |
| Transported air temperature (max) | °C | 50 |
| Transported air temperature (min) | °C | -25 |
| Ingress protection rating | - | IPX4 |
| Ingress protection rating of the drive | - | IP54 |
| Impeller material | - | Aluminium |

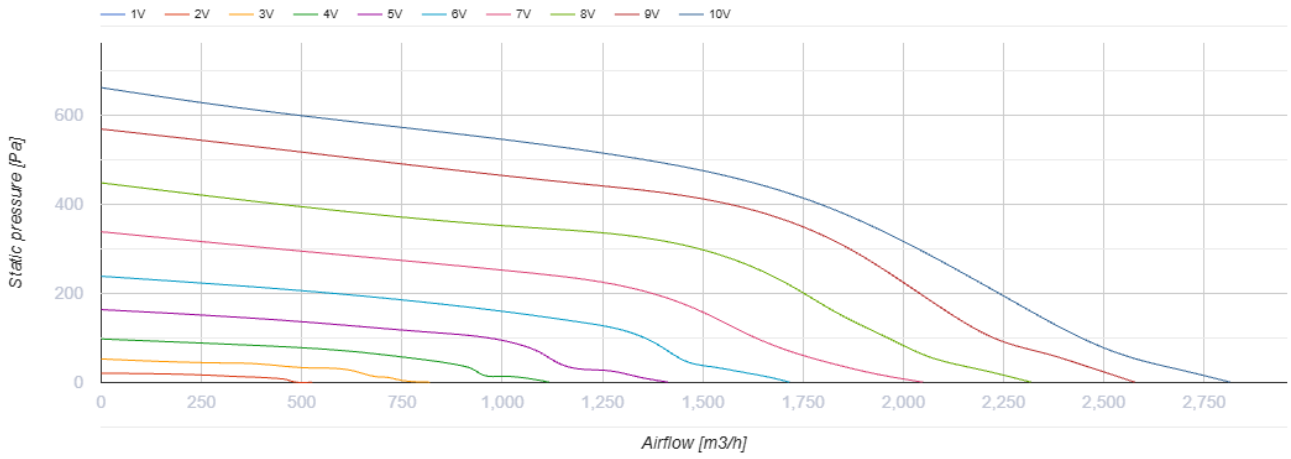


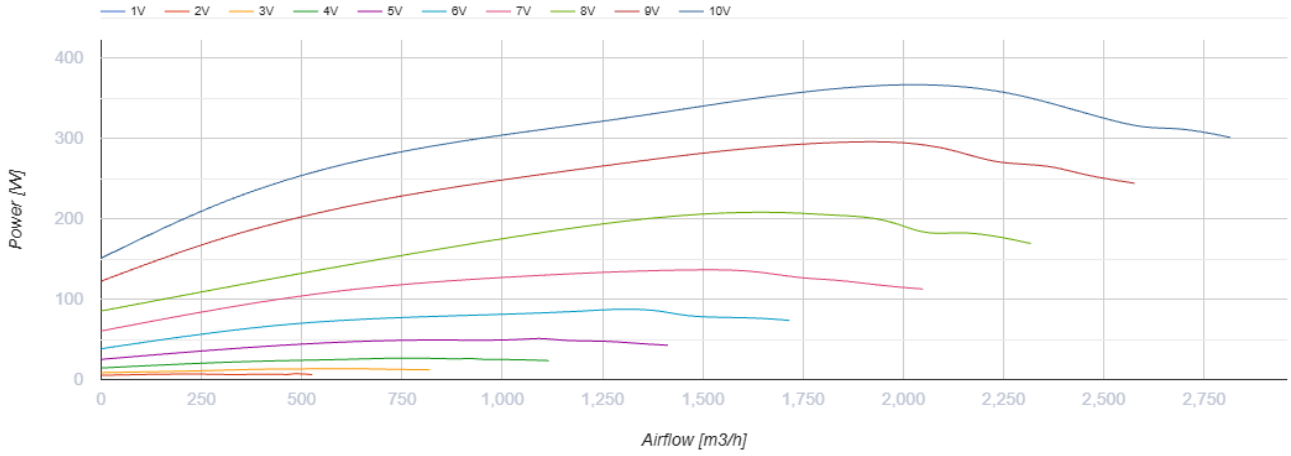


## Dimensions

| H | H1 | H2 | H3 | L | W | W1 | W2 |
|---|---|---|---|---|---|---|---|
| 350 | 370 | 390 | 457 | 650 | 600 | 620 | 640 |

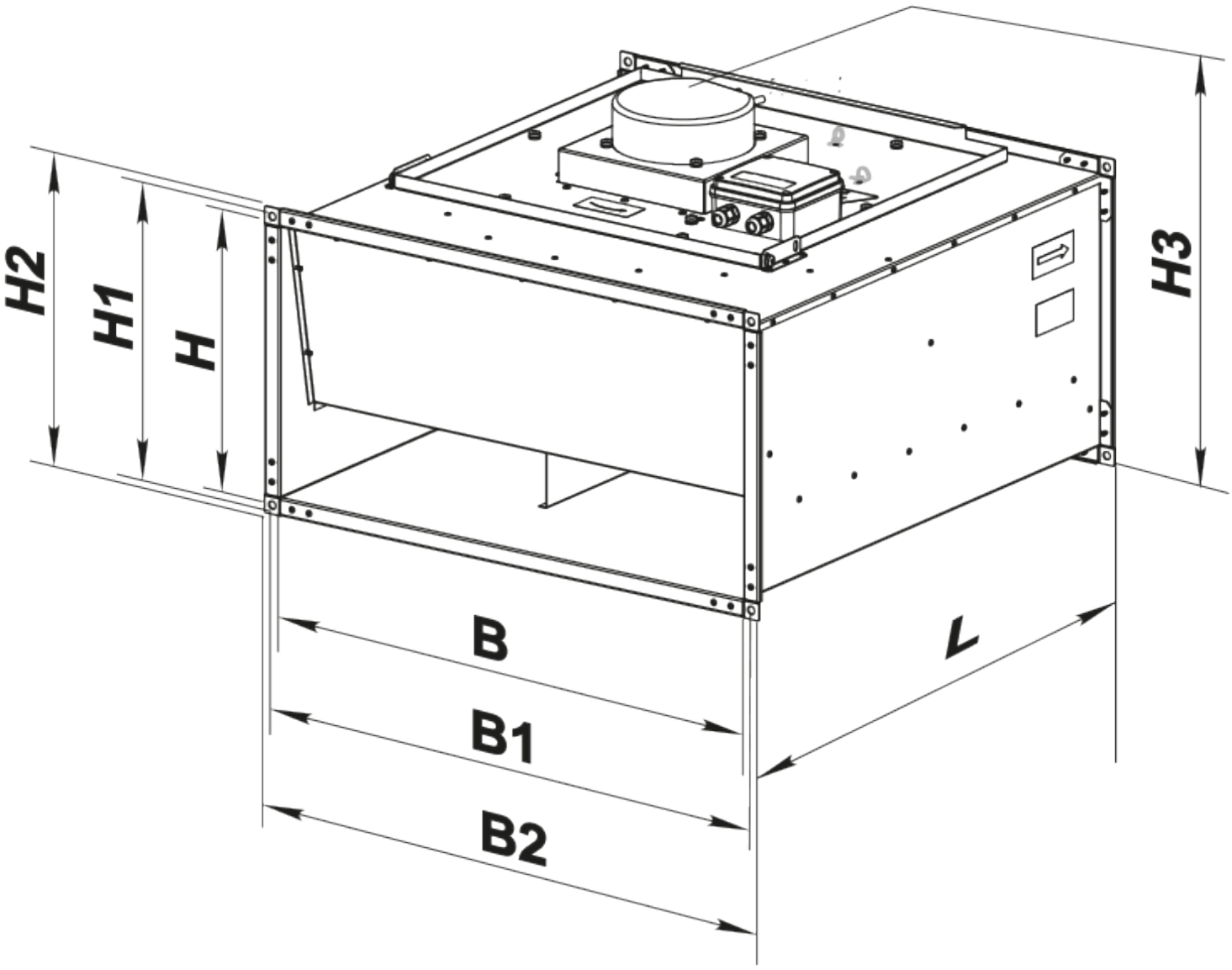
H2
H1
H
H3
B
B1
B2
L

## Ecodesign

| | |
|---|---|
| Trademark | Blauberg |
| Model | Box EC 60x35-1 |
| Type of ventilation unit | Unidirectional |
| Type of drive installed | Integrated VSD |
| Type of heat recovery system | None |
| Nominal external pressure (Pa) | 445 |
| Maximum external leakage rates (%) | 2.7 |
| Static efficiency (%) | 65.3 |
| Sound power level (dB(A)) | 69 |
| Effective electric power input (kW) | 0.263 |
| Declared typology | NRVU UVU |

## Accessories

### EC motors regulators

| Name | Photo | Description |
|---|---|---|
| CDT E/0-10 |  | Speed control for EC motors |