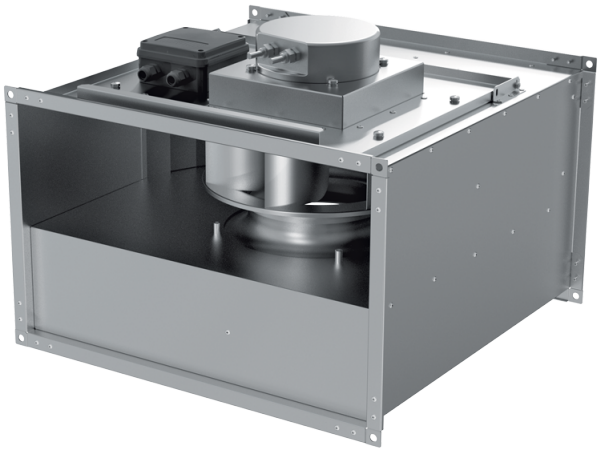

Box EC 50x25-1

Centrifugal inline fans with backward curved blades with EC-motors

• Impeller type: Centrifugal impeller with backward curved blades
• Casing material: Galvanized steel
• Installation in any position

	Unit of measurement	Box EC 50x25-1
Phases	-	1
Maximum supply voltage	V	230
Minimum supply voltage	V	230
Power supply frequency	Hz	50/60
Maximum airflow	m³/h	1590
Weight	kg	15.7
Transported air temperature (max)	°C	50
Transported air temperature (min)	°C	-25
Ingress protection rating	-	IPX4
Ingress protection rating of the drive	-	IP54
Impeller material	-	Galvanized steel

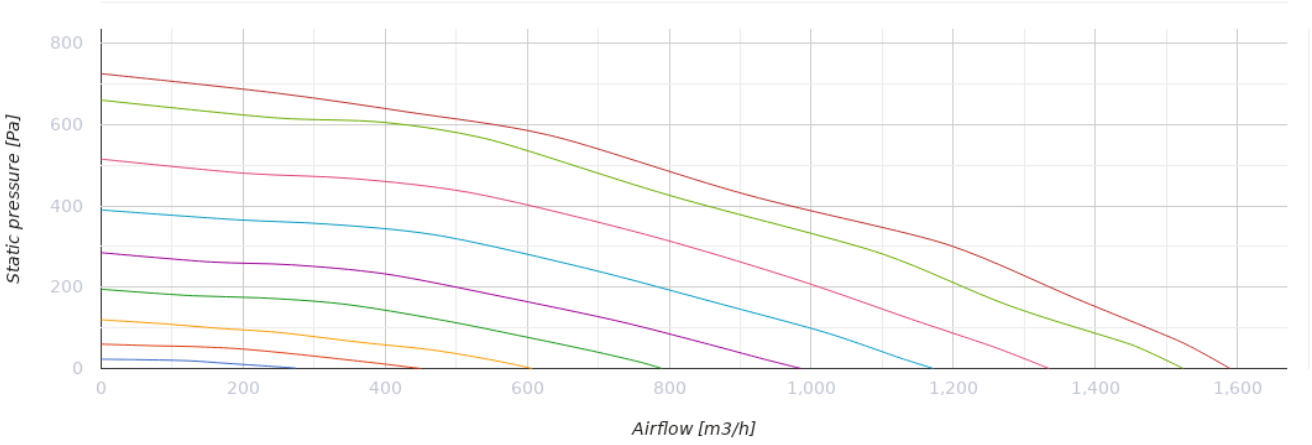
Static pressure [Pa]
800
600
400
200
0
0
200
400
600
800
1,000
1,200
1,400
1,600
Airflow [m3/h]

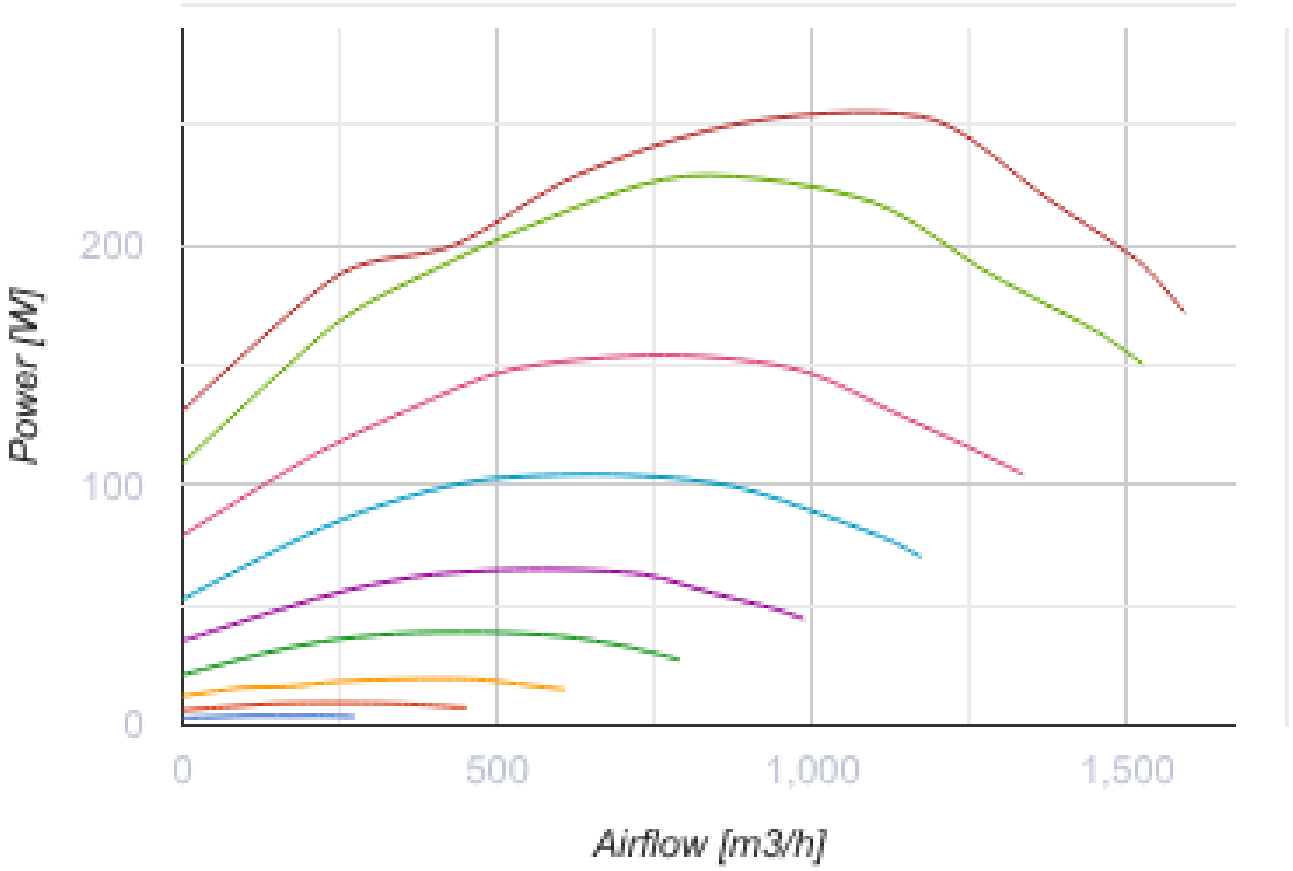
Power [W]
200
100
0
0
500
1,000
1,500
Airflow [m3/h]

Dimensions

H	H1	H2	H3	L	W	W1	W2
250	270	290	328	530	500	520	540

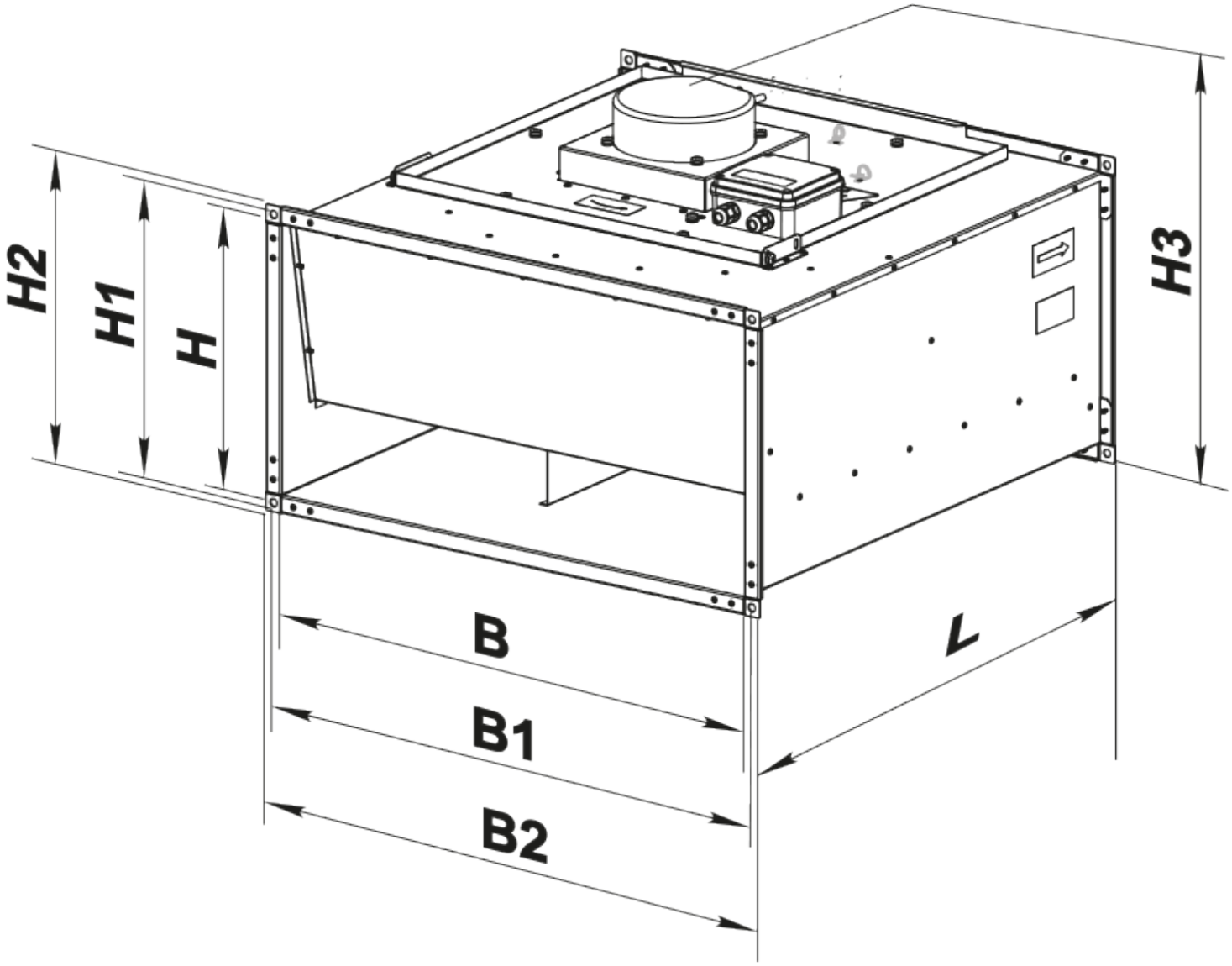

Ecodesign

Trademark	Blauberg
Model	Box EC 50x25-1
Type of ventilation unit	Unidirectional
Type of drive installed	Integrated VSD
Type of heat recovery system	None
Nominal external pressure (Pa)	330
Maximum external leakage rates (%)	2.7
Static efficiency (%)	53.1
Sound power level (dB(A))	65
Effective electric power input (kW)	0.154
Declared typology	NRVU UVU