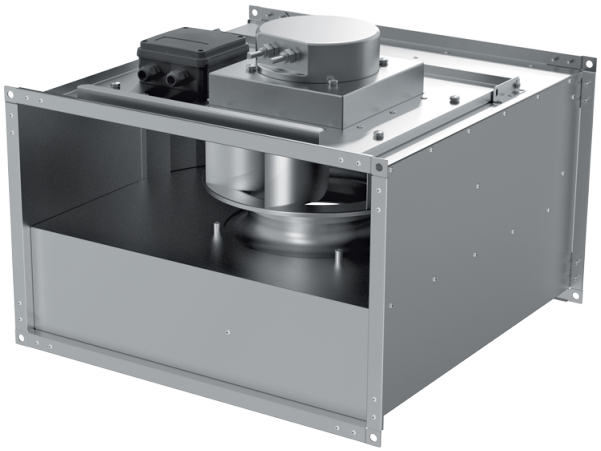

# Box EC 30x15-1 max

Centrifugal inline fans with backward curved blades with EC-motors

• Impeller type: Centrifugal impeller with backward curved blades
• Casing material: Galvanized steel
• Installation in any position

| | Unit of measurement | Box EC 30x15-1 max |
|---|---|---|
| Phases | - | 1 |
| Maximum supply voltage | V | 230 |
| Minimum supply voltage | V | 230 |
| Power supply frequency | Hz | 50/60 |
| Maximum airflow | m³/h | 665 |
| Weight | kg | 6 |
| Transported air temperature (max) | °C | 50 |
| Transported air temperature (min) | °C | -25 |
| Ingress protection rating | - | IPX4 |
| Ingress protection rating of the drive | - | IP54 |
| Impeller material | - | Plastic |

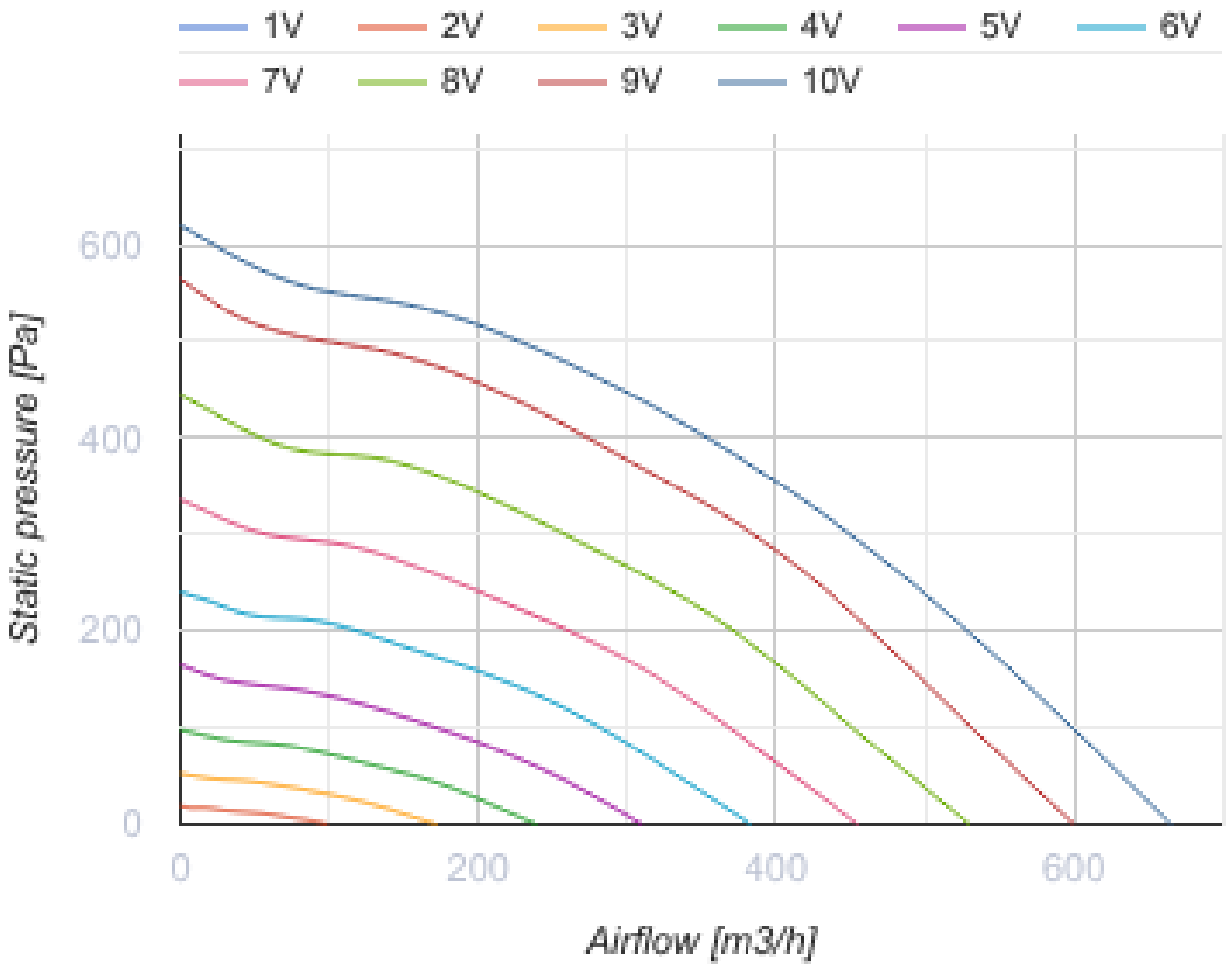
1V
2V
3V
4V
5V
6V
7V
8V
9V
10V
Static pressure [Pa]
600
400
200
0
0
200
400
600
Airflow [m3/h]

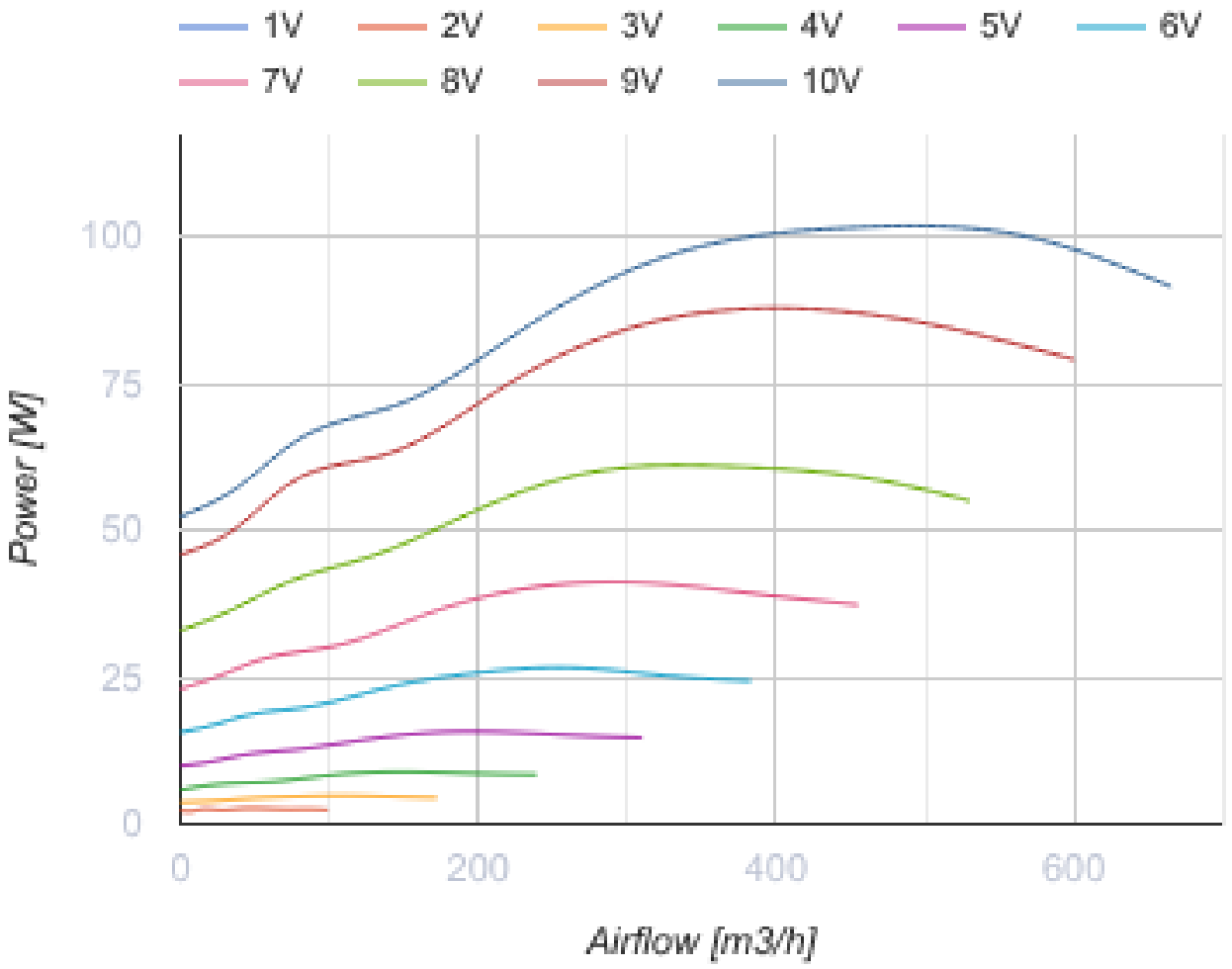


## Dimensions

| H | H1 | H2 | H3 | L | W | W1 | W2 |
|---|---|---|---|---|---|---|---|
| 150 | 170 | 190 | 228 | 350 | 300 | 320 | 340 |

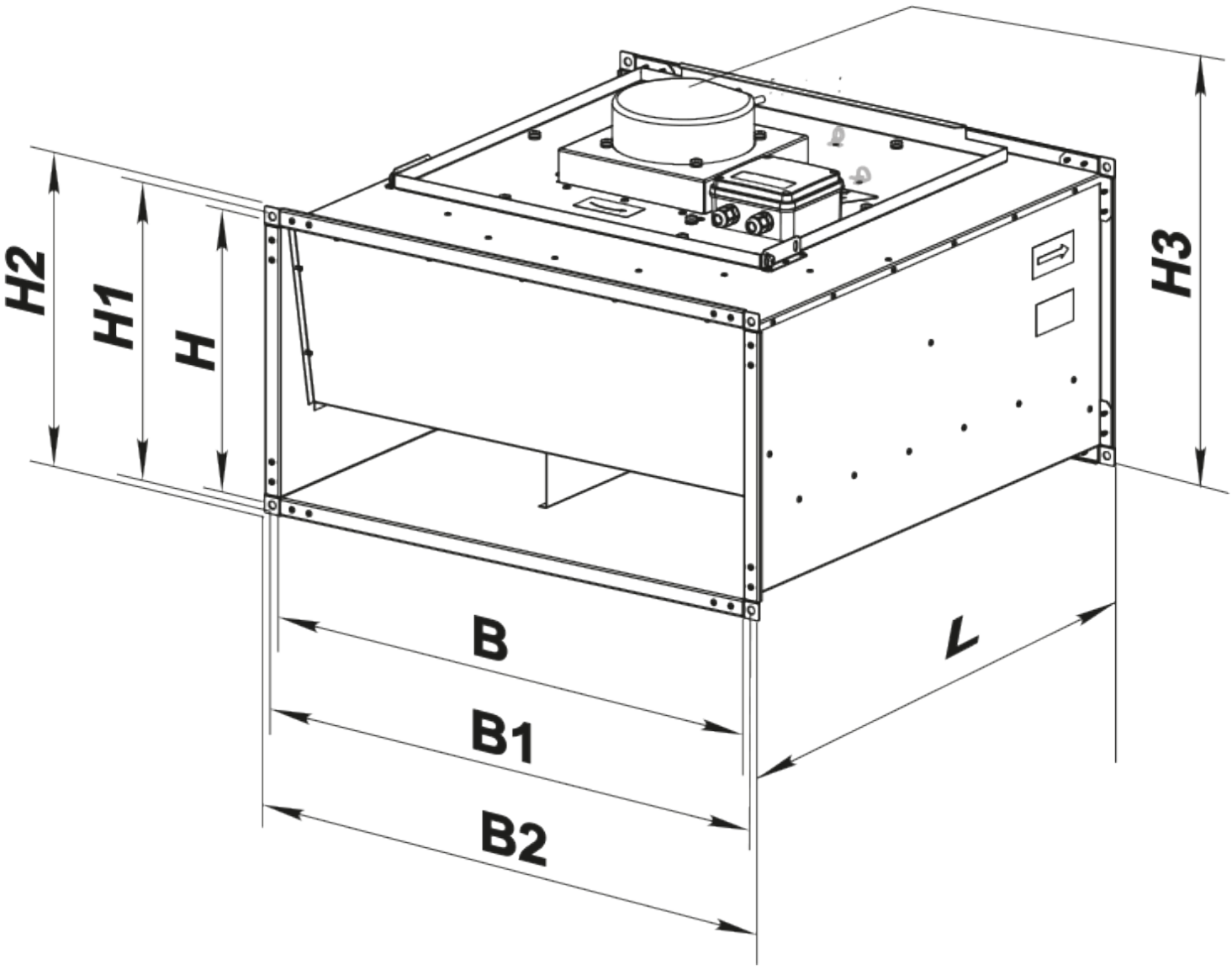
H2
H1
H
H3
B
B1
B2
L

## Ecodesign

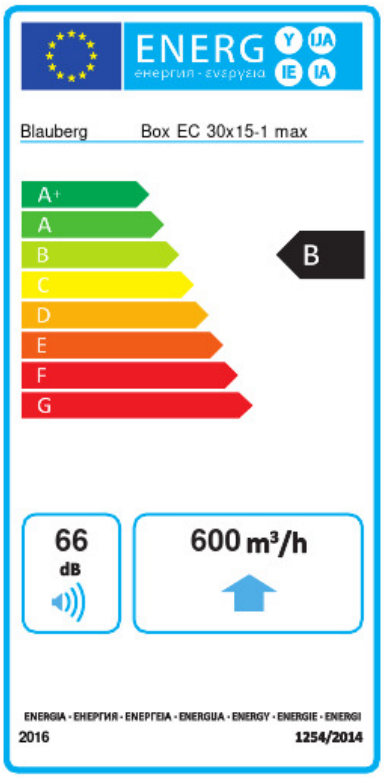


| Trademark | Blauberg | | | | | |
|---|---|---|---|---|---|---|
| Model | Box EC 30x15-1 max | | | | | |
| Specific energy consumption (SEC) (kWh/(m²/a)) | Cold | | Average | | Warm | |
| | -54.1 | A+ | -27.1 | B | -11.6 | E |
| Type of ventilation unit | Unidirectional | | | | | |
| Type of drive installed | Variable speed | | | | | |
| Type of heat recovery system | None | | | | | |
| Maximum flow rate (m³/h) | 600 | | | | | |
| Electric power input (W) | 99 | | | | | |
| Reference flow rate (m³/s) | 0.117 | | | | | |
| Reference pressure difference (Pa) | 50 | | | | | |
| Specific power input (SPI) (W/(m³/h)) | 0.092 | | | | | |
| Control typology | Local demand control | | | | | |
| Maximum external leakage rates (%) | 2.7 | | | | | |
| Sound power level (dB(A)) | 66 | | | | | |
| Declared typology | RVU UVU | | | | | |
| The annual electricity consumption (AEC) (kWh/a) | Cold | | Average | | Warm | |
| | 49 | | 49 | | 49 | |
| The annual heating saved (AHS) (kWh/a) | Cold | | Average | | Warm | |
| | 5536 | | 2830 | | 1280 | |

## Accessories

### EC motors regulators

| Name | Photo | Description |
|---|---|---|
| CDT E/0-10 |  | Speed control for EC motors |