

Box-D 150

Centrifugal ceiling fans in metal casings with plastic front panels

• Impeller type: Centrifugal impeller with backward curved blades
• Casing material: Galvanized steel
• Backdraft protection: Backdraft damper

	Unit of measurement	Box-D 150
Phases	-	1
Minimum supply voltage	V	230
Maximum supply voltage	V	230
Power supply frequency	Hz	50/60
Maximum airflow	m³/h	485
Weight	kg	6.5
Transported air temperature (max)	°C	50
Transported air temperature (min)	°C	-25
Ingress protection rating	-	IPX4
Ingress protection rating of the drive	-	IP44
Impeller material	-	Plastic

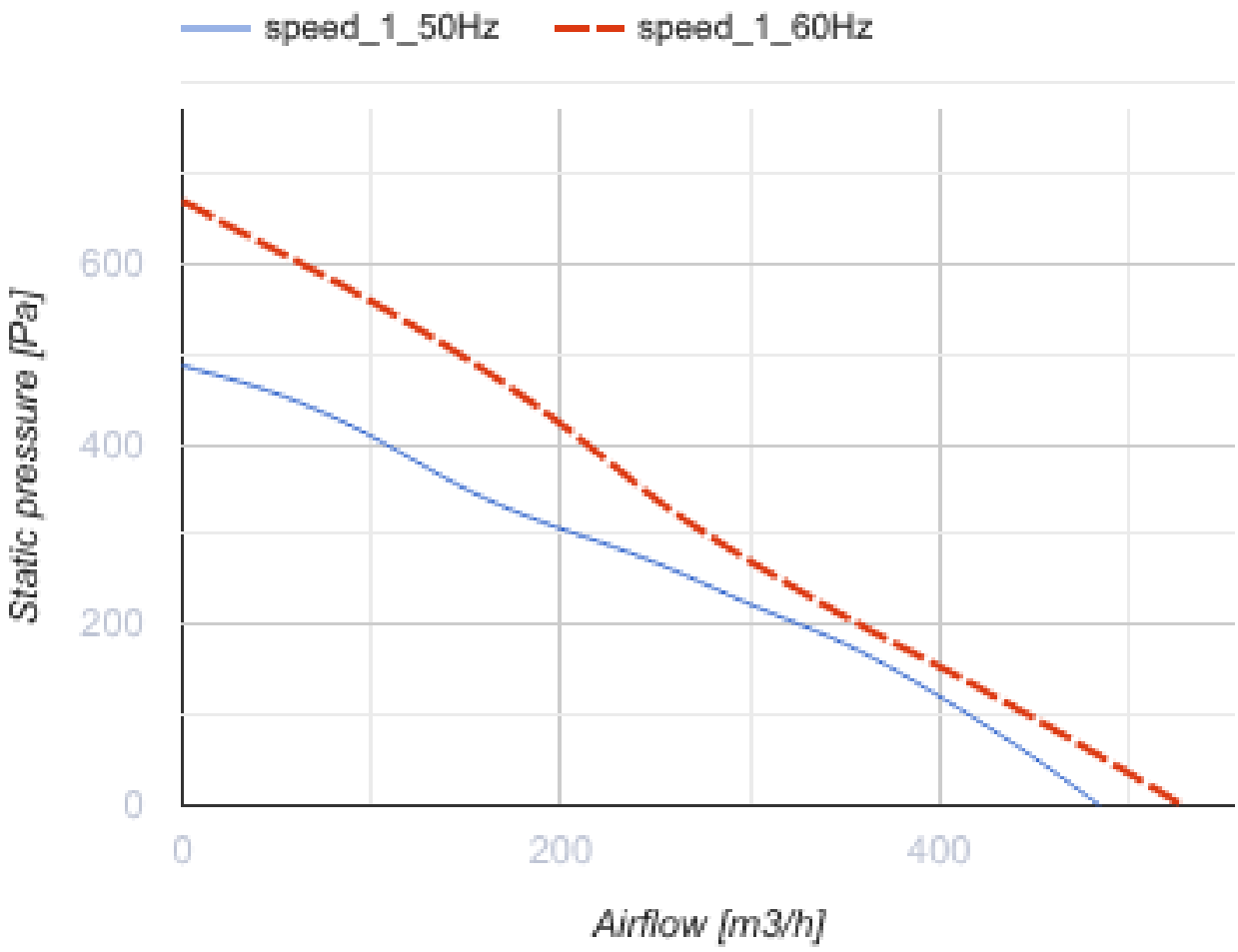
speed_1_50Hz
speed_1_60Hz
Static pressure [Pa]
600
400
200
0
0
200
400
Airflow [m3/h]

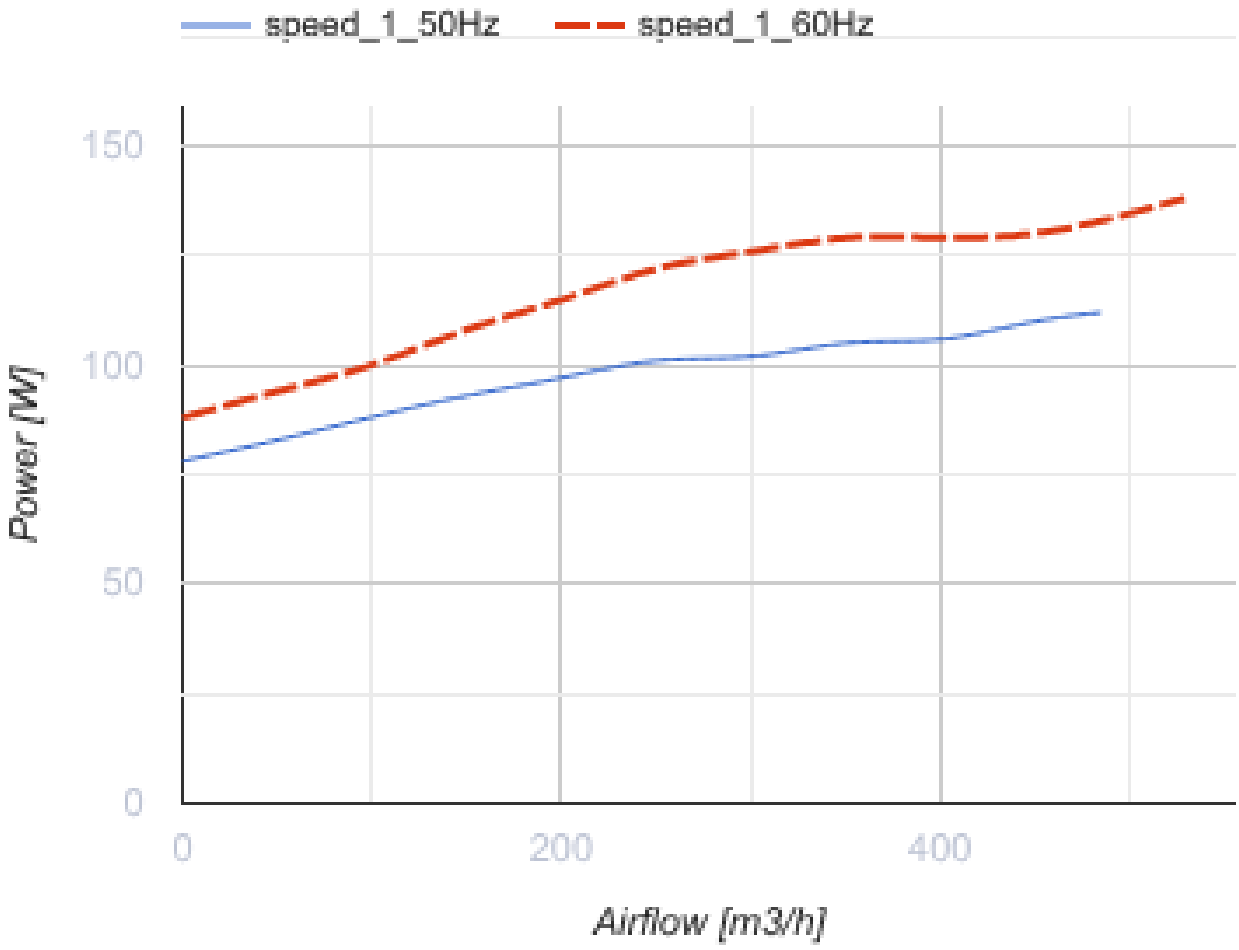

Dimensions

ØD	B	H	L
149	355	180	419

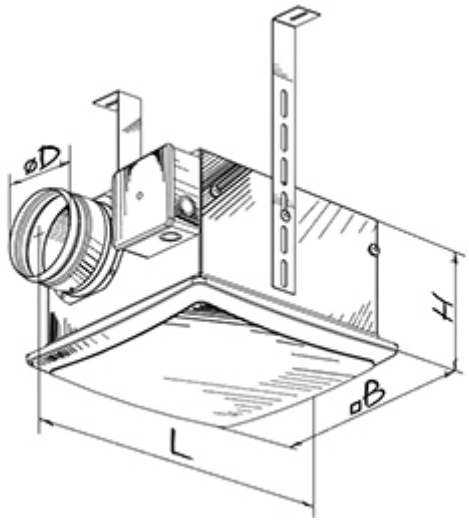

Accessories

Humidity sensors

Name	Photo	Description
HSE / HSI 1.5		Sensors
TE / TI 1.5		Timers
IRSE / IRSI 1.5		Sensors