

Box-D 100 L

Centrifugal ceiling fans in metal casings with plastic front panels

• Impeller type: Centrifugal impeller with backward curved blades
• Casing material: Galvanized steel

	Unit of measurement	Box-D 100 L
Phases	-	1
Minimum supply voltage	V	230
Maximum supply voltage	V	230
Power supply frequency	Hz	50/60
Maximum airflow	m³/h	170
Weight	kg	3.4
Transported air temperature (max)	°C	45
Transported air temperature (min)	°C	-25
Ingress protection rating	-	IPX4
Ingress protection rating of the drive	-	IP44
Impeller material	-	Plastic

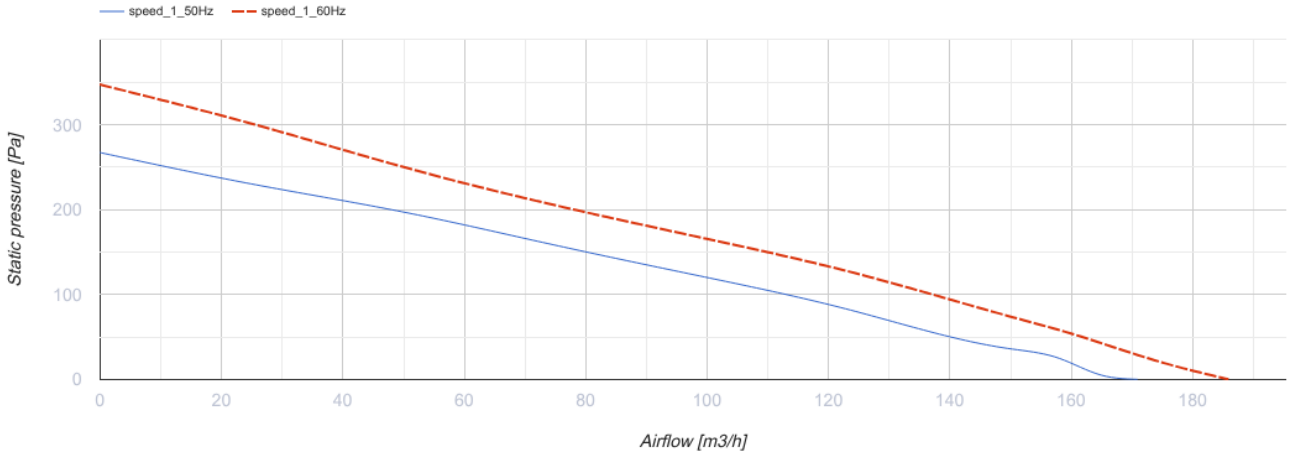

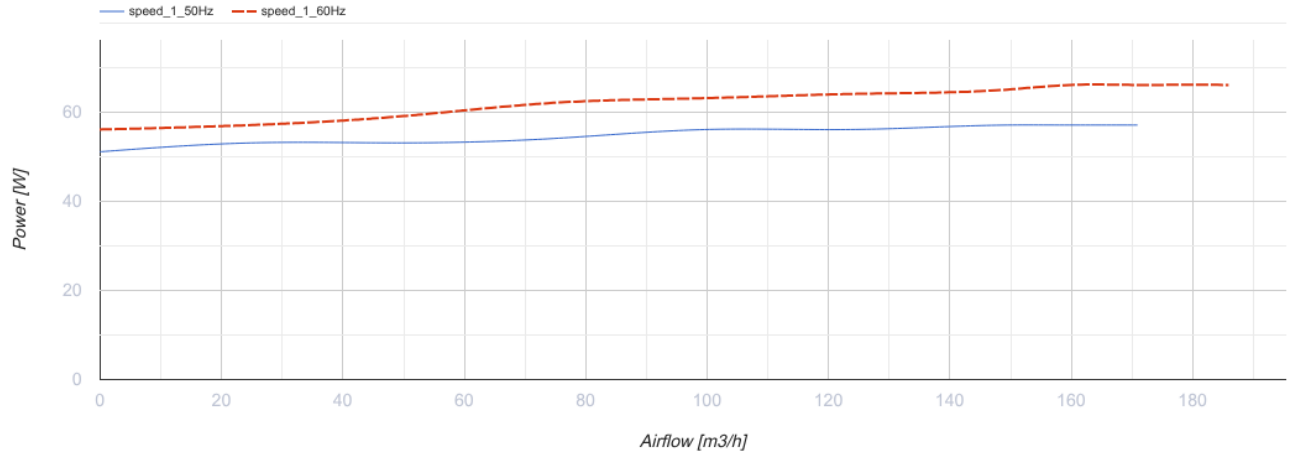

Dimensions

ØD	B	H	L
100	240	160	305

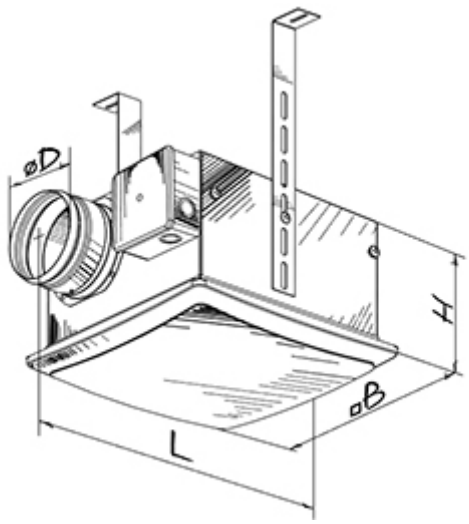

Ecodesign

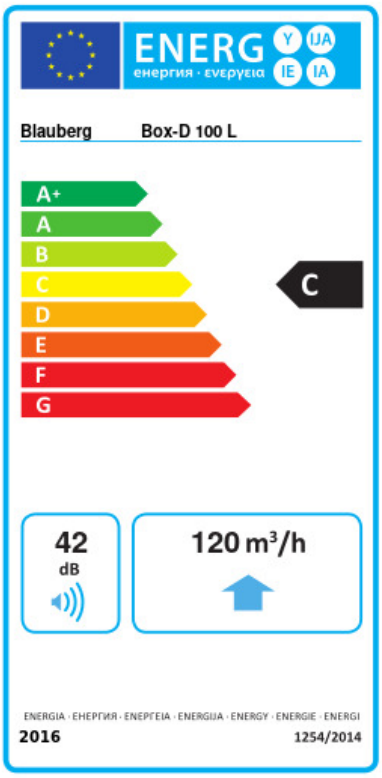

Trademark	Blauberg					
Model	Box-D 100 L					
Specific energy consumption (SEC) (kWh/(m²/a))	Cold		Average		Warm	
	-50.5	A+	-23.4	C	-7.9	F
Type of ventilation unit	Unidirectional					
Type of drive installed	Variable speed					
Type of heat recovery system	None					
Maximum flow rate (m³/h)	120					
Electric power input (W)	56					
Reference flow rate (m³/s)	0.023					
Reference pressure difference (Pa)	50					
Specific power input (SPI) (W/(m³/h))	0.367					
Control typology	Local demand control					
Maximum external leakage rates (%)	2.7					
Declared typology	RVU UVU					
Sound power level (dB(A))	42					
The annual electricity consumption (AEC) (kWh/a)	Cold		Average		Warm	
	194		194		194	
The annual heating saved (AHS) (kWh/a)	Cold		Average		Warm	
	5536		2830		1280	

Accessories

Humidity sensors

Name	Photo	Description
HSE / HSI 1.5		Sensors
TE / TI 1.5		Timers
LSE / LSI 1.5		Sensors

IRSE / IRSI 1.5		Sensors