

Box 80x50 4D

Centrifugal inline fans with backward curved blades

• Impeller type: Centrifugal impeller with backward curved blades
• Casing material: Galvanized steel
• Installation in any position

	Unit of measurement	Box 80x50 4D
Phases	-	3
Maximum supply voltage	V	400
Minimum supply voltage	V	400
Power supply frequency	Hz	50
Maximum airflow	m³/h	7800
Weight	kg	54
Transported air temperature (max)	°C	60
Transported air temperature (min)	°C	-30
Ingress protection rating	-	IPX4
Ingress protection rating of the drive	-	IP44
Impeller material	-	Aluminium

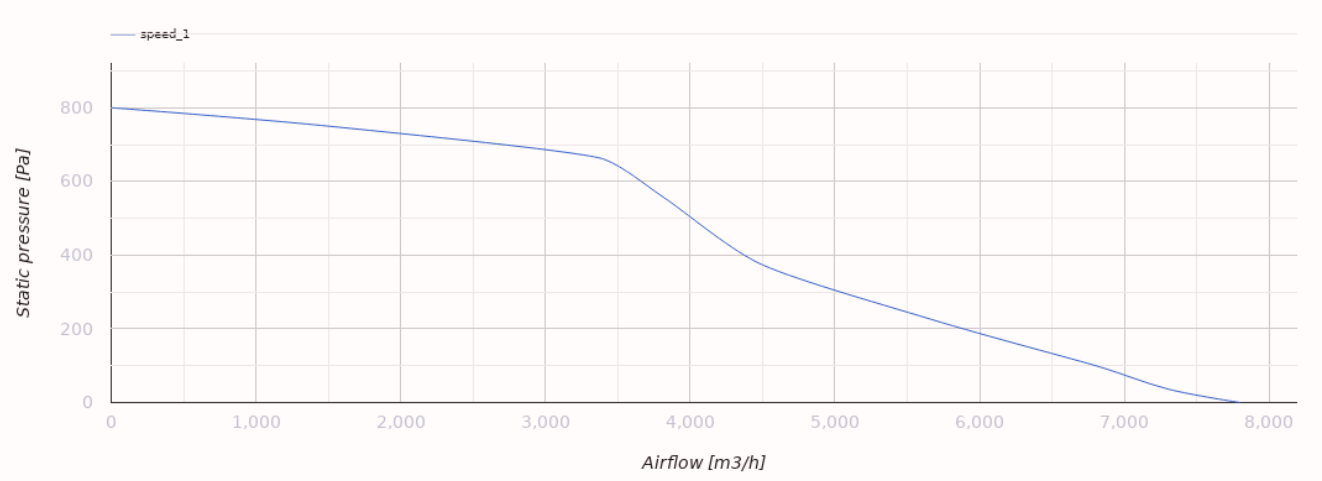

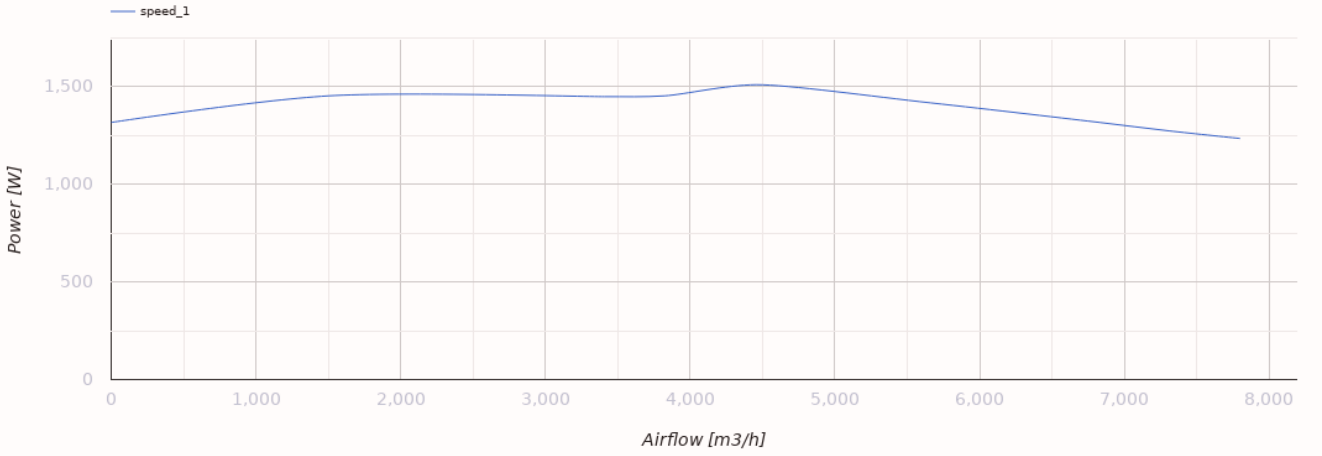

Dimensions

B	B1	H	H1	H2	L
800	840	500	540	540	903

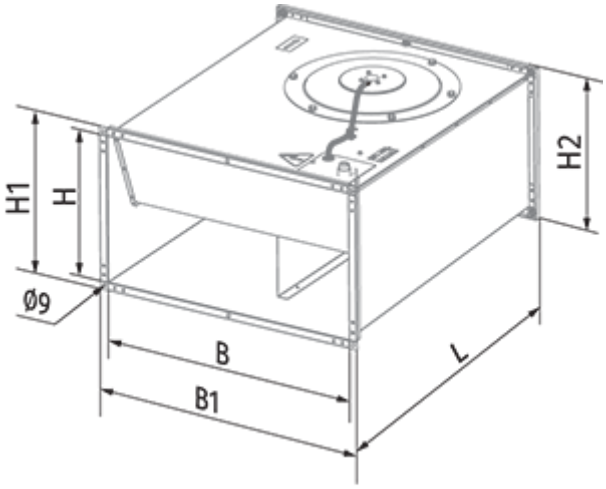

Ecodesign

Trademark	Blauberg
Model	Box 80x50 4D
Type of ventilation unit	Unidirectional
Type of drive installed	External MSD or VSD
Type of heat recovery system	None
Nominal external pressure (Pa)	655
Maximum external leakage rates (%)	2.7
Static efficiency (%)	45.1
Declared typology	NRVU UVU
Effective electric power input (kW)	1.451
Sound power level (dB(A))	82