

Box 60x35 4E max

Centrifugal inline fans with backward curved blades

• Impeller type: Centrifugal impeller with backward curved blades
• Casing material: Galvanized steel
• Installation in any position

	Unit of measurement	Box 60x35 4E max
Phases	-	1
Maximum supply voltage	V	240
Minimum supply voltage	V	220
Power supply frequency	Hz	50/60
Maximum airflow	m^3/h	4070
Weight	kg	30
Transported air temperature (max)	°C	60
Transported air temperature (min)	°C	-30
Ingress protection rating	-	IPX4
Ingress protection rating of the drive	-	IP44
Impeller material	-	Aluminium

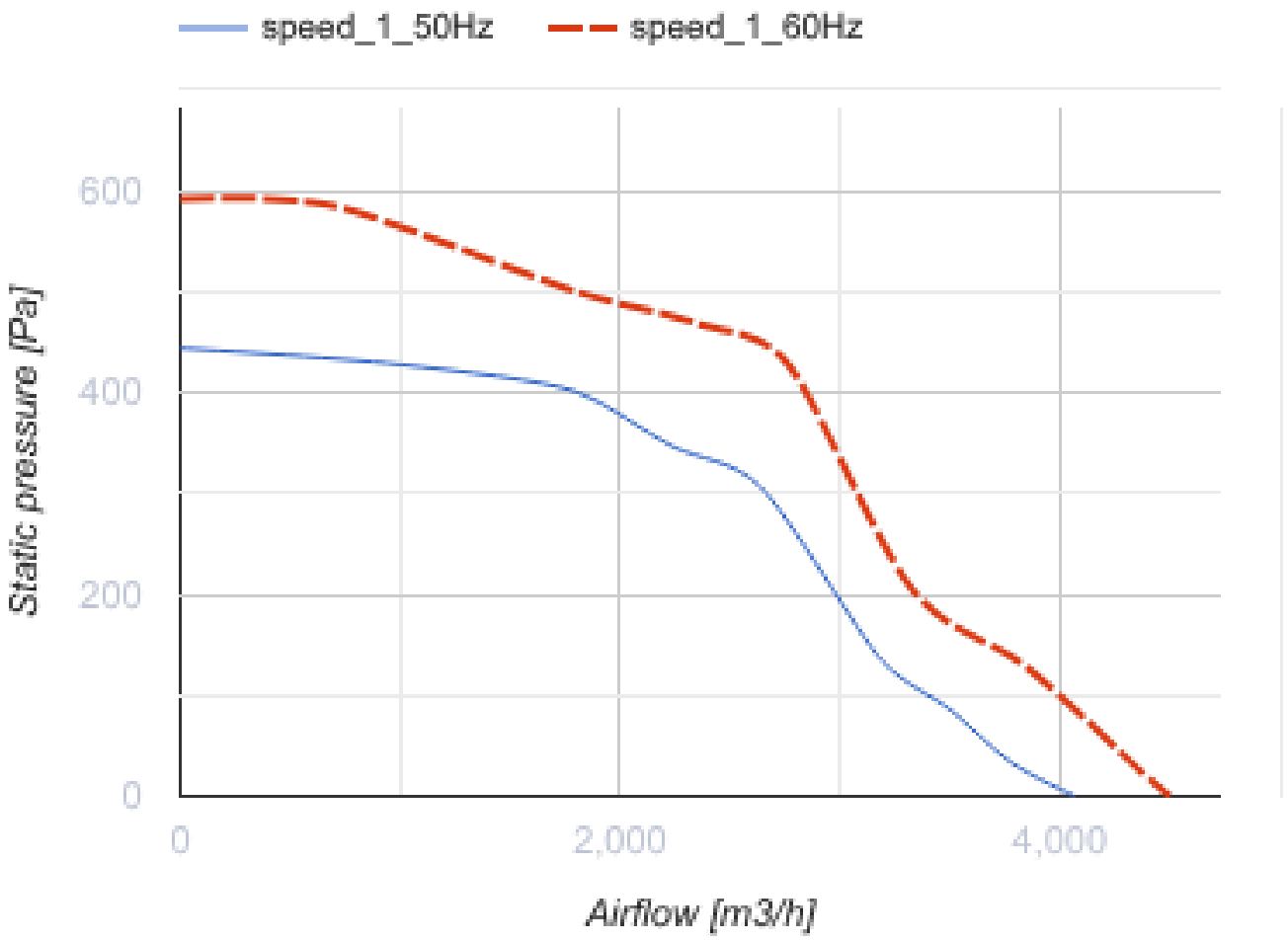
speed_1_50Hz
speed_1_60Hz
600
400
200
0
Static pressure [Pa]
0
2,000
4,000
Airflow [m3/h]

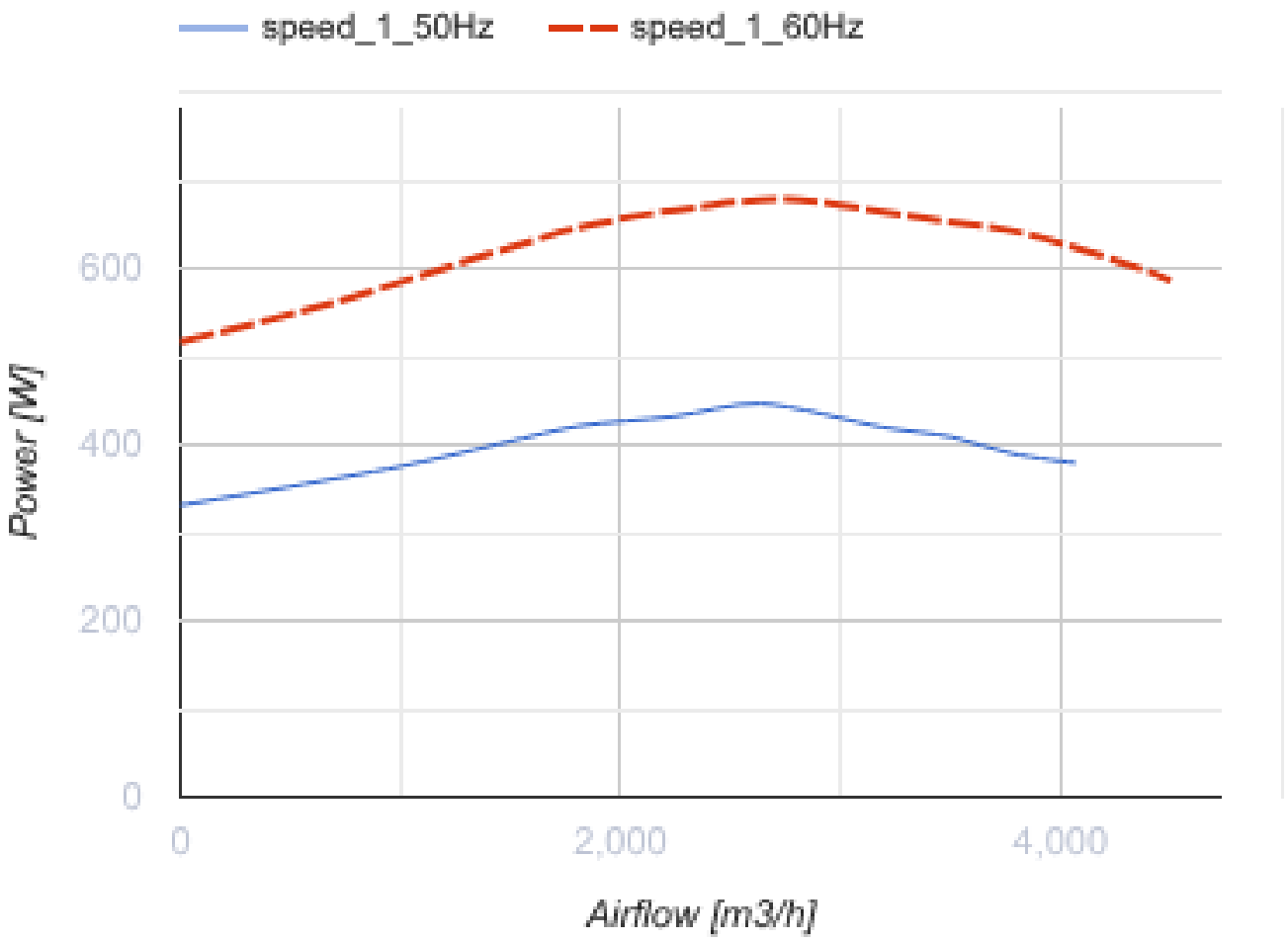

Dimensions

B	B1	H	H1	H2	L
600	640	350	390	390	652

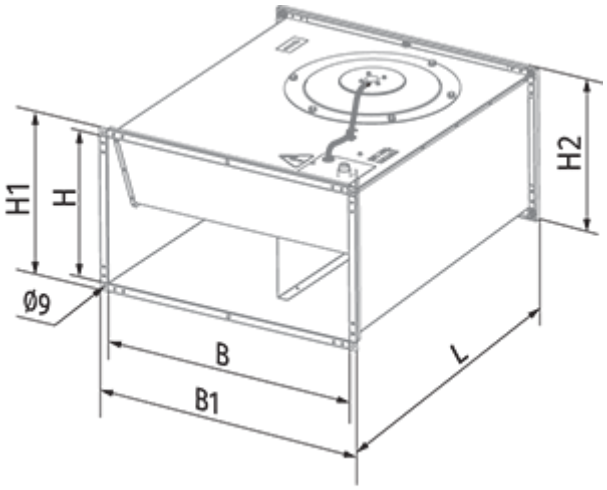
H1
H
H2
Ø9
B
B1
L

Ecodesign

Trademark	Blauberg
Model	Box 60x35 4E max
Type of ventilation unit	Unidirectional
Type of drive installed	External MSD or VSD
Type of heat recovery system	None
Nominal external pressure (Pa)	347
Maximum external leakage rates (%)	2.7
Static efficiency (%)	51
Declared typology	NRVU UVU
Effective electric power input (kW)	0.432
Sound power level (dB(A))	78