

Box 50x30 4D

Centrifugal inline fans with backward curved blades

• Impeller type: Centrifugal impeller with backward curved blades
• Casing material: Galvanized steel
• Installation in any position

	Unit of measurement	Box 50x30 4D
Phases	-	3
Maximum supply voltage	V	400
Minimum supply voltage	V	400
Power supply frequency	Hz	50/60
Maximum airflow	m³/h	1380
Weight	kg	19.8
Transported air temperature (max)	°C	65
Transported air temperature (min)	°C	-25
Ingress protection rating	-	IPX4
Ingress protection rating of the drive	-	IP44
Impeller material	-	Aluminium

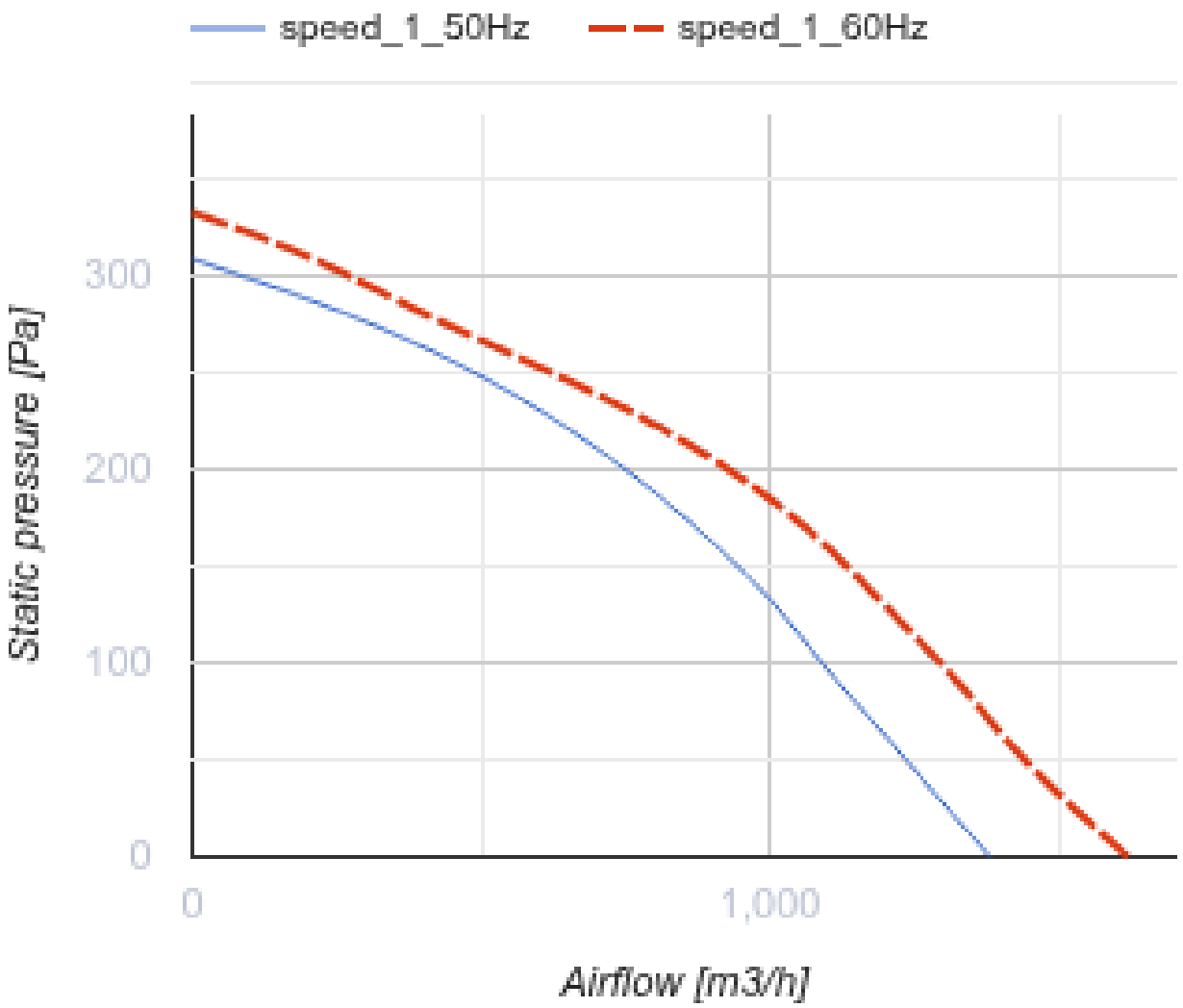
speed_1_50Hz
speed_1_60Hz
300
200
100
0
Static pressure [Pa]
0
1,000
Airflow [m3/h]

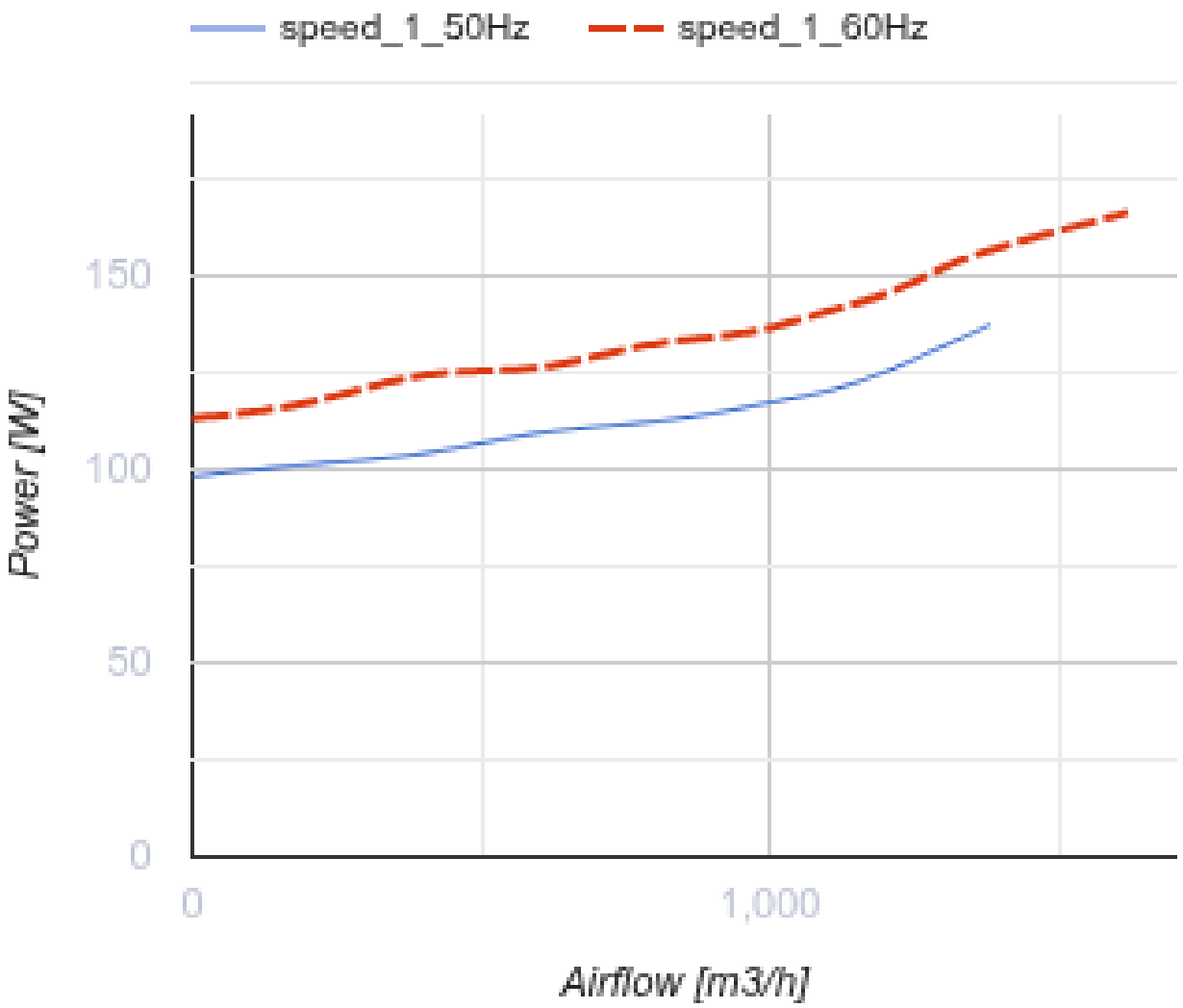

Dimensions

B	B1	H	H1	H2	L
500	540	300	340	340	680

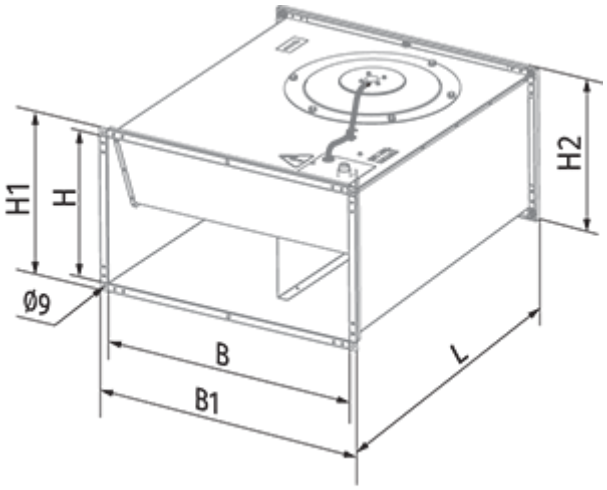
H1
H
H2
Ø9
B
B1
L

Ecodesign

Trademark	Blauberg
Model	Box 50x30 4D
Type of ventilation unit	Unidirectional
Type of drive installed	External MSD or VSD
Type of heat recovery system	None
Nominal external pressure (Pa)	184
Maximum external leakage rates (%)	2.7
Static efficiency (%)	38.3
Sound power level (dB(A))	73
Effective electric power input (kW)	0.111
Declared typology	NRVU UVU