

Box 50x25 2E

Centrifugal inline fans with backward curved blades

• Impeller type: Centrifugal impeller with backward curved blades
• Casing material: Galvanized steel
• Installation in any position

	Unit of measurement	Box 50x25 2E
Phases	-	1
Maximum supply voltage	V	240
Minimum supply voltage	V	220
Power supply frequency	Hz	50/60
Maximum airflow	m³/h	1720
Weight	kg	17.88
Transported air temperature (max)	°C	45
Transported air temperature (min)	°C	-25
Ingress protection rating	-	IPX4
Ingress protection rating of the drive	-	IP44
Impeller material	-	Galvanized steel

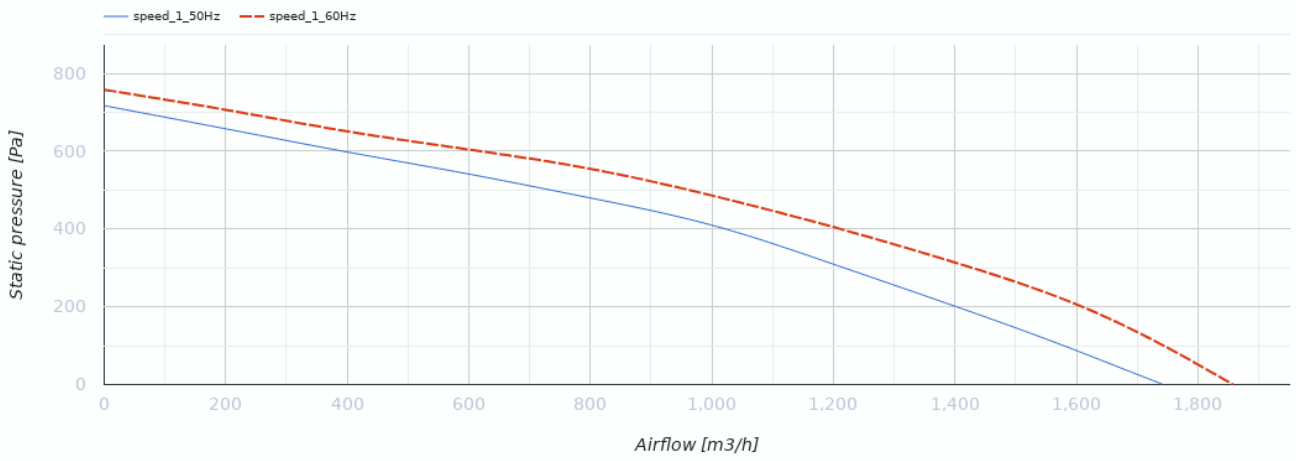

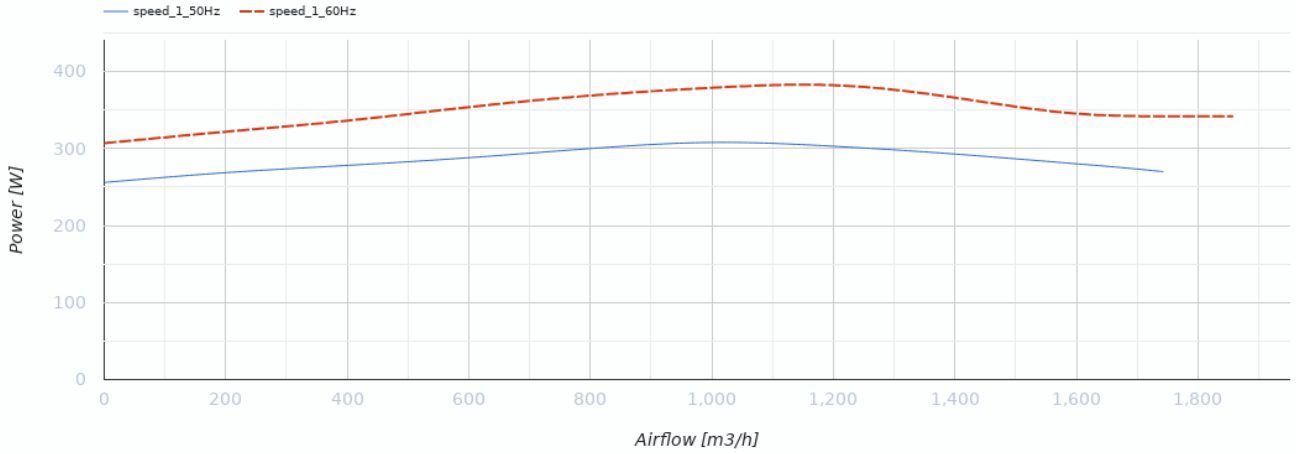

Dimensions

B	B1	H	H1	H2	L
500	540	250	290	290	640

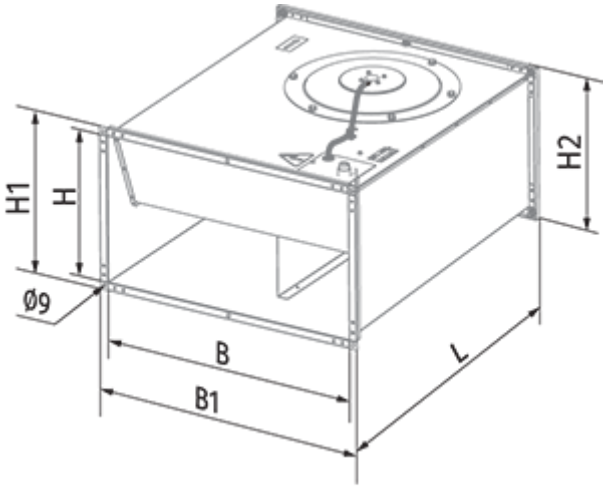

Ecodesign

Trademark	Blauberg
Model	Box 50x25 2E
Type of ventilation unit	Unidirectional
Type of drive installed	External MSD or VSD
Type of heat recovery system	None
Nominal external pressure (Pa)	400
Maximum external leakage rates (%)	2.7
Static efficiency (%)	40.5
Declared typology	NRVU UVU
Effective electric power input (kW)	0.279
Sound power level (dB(A))	81