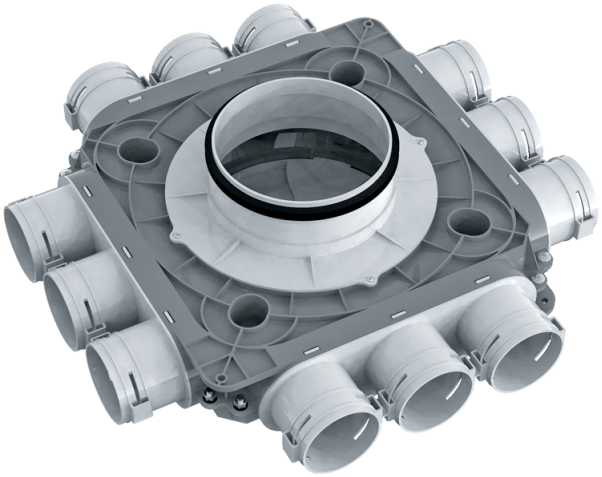

# BlauFast SR 200/63x12 50P

For supply and exhaust systems in residential premises. Distribution of air from the ventilation unit through the ducts

• Casing material: Polypropylene

| | Unit of measurement | BlauFast SR 200/63x12 50P |
|---|---|---|
| Ambient air temperature min | °C | -20 |
| Ambient air temperature max | °C | 60 |

## Dimensions

| Ø d | H | L |
|---|---|---|
| 188 | 140 | 464 |

