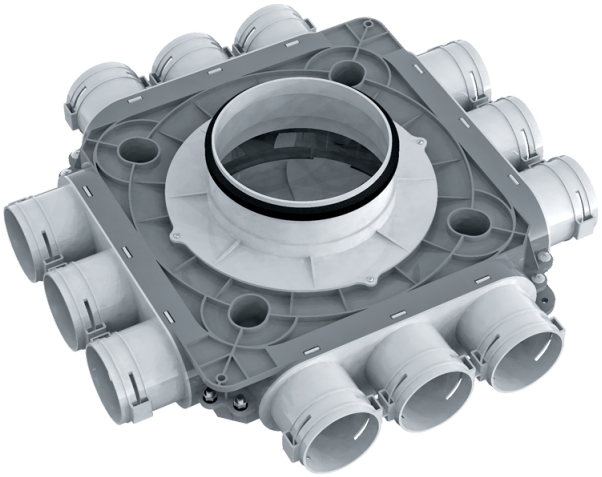

BlauFast SR 150/63x12 50P

For supply and exhaust systems in residential premises. Distribution of air from the ventilation unit through the ducts

- Casing material: Polypropylene

	Unit of measurement	BlauFast SR 150/63x12 50P
Ambient air temperature min	°C	-20
Ambient air temperature max	°C	60

Dimensions

Ø d	H	L
138	140	464

