

# BlauFast SR 125/90x2 50P

Supply or exhaust ventilation systems of residential spaces. For distribution of air from the ventilation unit through the air ducts

- Casing material: Polypropylene

| | Unit of measurement | BlauFast SR 125/90x2 50P |
|---|---|---|
| Ambient air temperature max | °C | 60 |
| Ambient air temperature min | °C | -20 |

## Dimensions

| Ø D | Ø d | W |
|---|---|---|
| 125 | 90 | 271 |

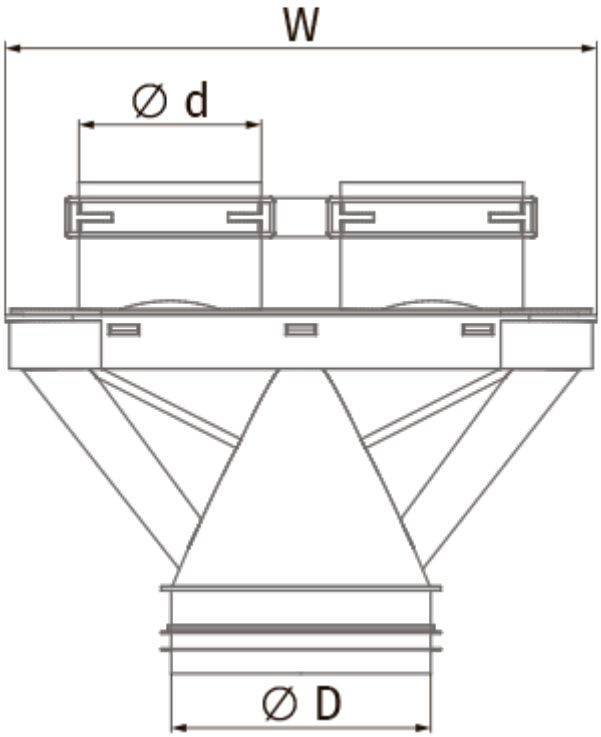
W
Ø d
Ø D