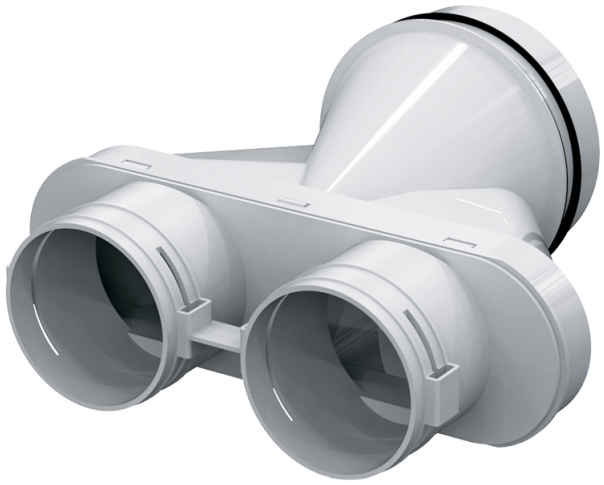

BlauFast SR 125/75x2 50P

Supply or exhaust ventilation systems of residential spaces. For distribution of air from the ventilation unit through the air ducts

- Casing material: Polypropylene

	Unit of measurement	BlauFast SR 125/75x2 50P
Ambient air temperature max	°C	60
Ambient air temperature min	°C	-20

Dimensions

Ø D	Ø d	W
125	75	271

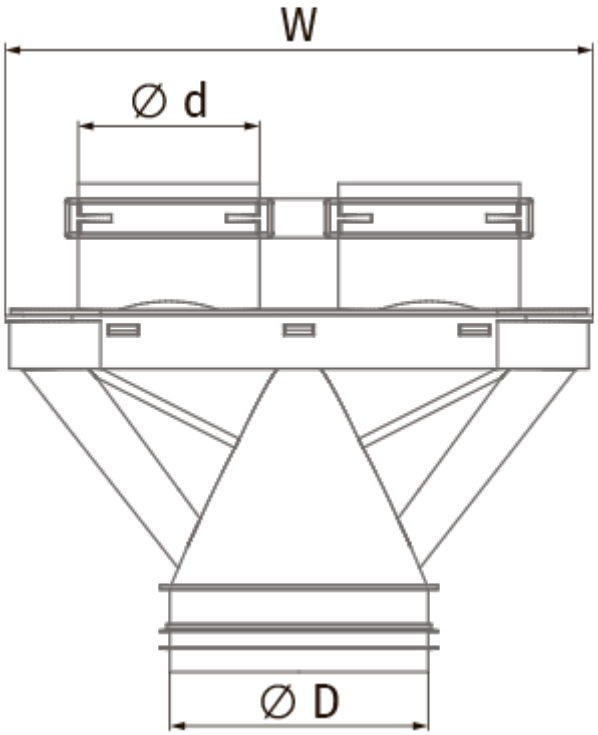
W
Ø d
Ø D