

# BlauFast SR 125/63x3 50P

For supply and exhaust systems in residential premises. Distribution of air from the ventilation unit through the ducts

• Casing material: Polypropylene

| | Unit of measurement | BlauFast SR 125/63x3 50P |
|---|---|---|
| Ambient air temperature min | °C | -20 |
| Ambient air temperature max | °C | 60 |

## Dimensions

| Ø D | Ø d | W |
|---|---|---|
| 125 | 63 | 271 |

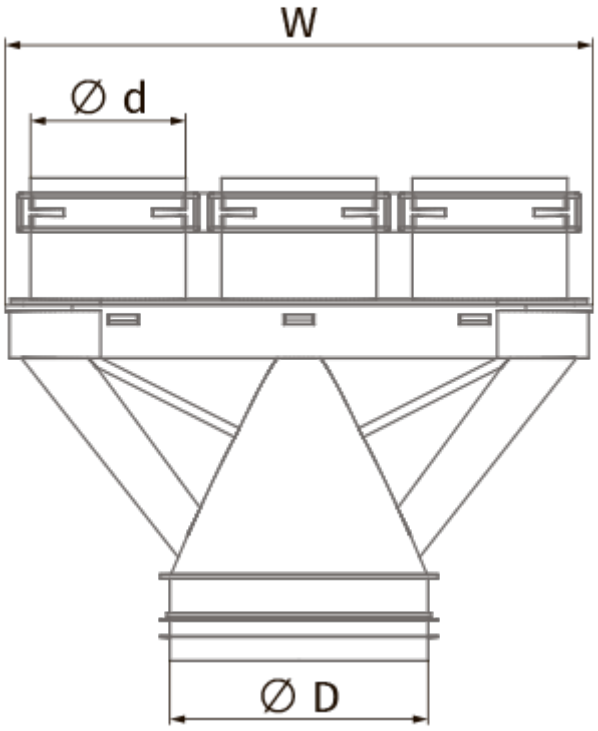
W
Ø d
Ø D