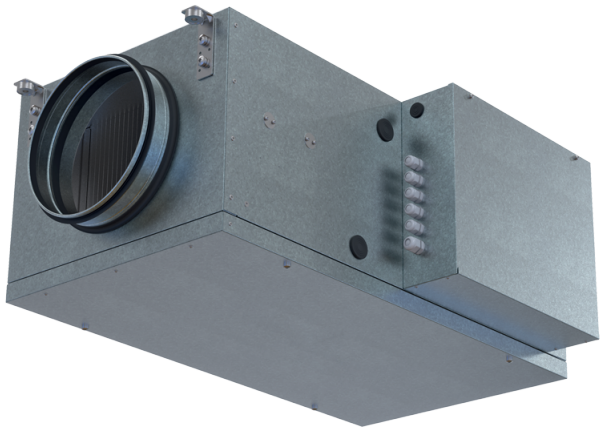

Blaubox EC MW 700 S31

Supply ventilation units with a water heater

- Sound-insulated casing
- Reheater: Water
- BMS protocol: ModBus
- Control: Wired control panel
- Casing material: Aluzinc steel

	Unit of measurement	Blaubox EC MW 700 S31
Phases	-	1
Maximum supply voltage	V	230
Minimum supply voltage	V	230
Power supply frequency	Hz	50
Maximum airflow	m^3/h	800
Weight	kg	27
Transported air temperature (max)	°C	40
Transported air temperature (min)	°C	-30
Ingress protection rating	-	IP22
Ingress protection rating of the drive	-	IP44

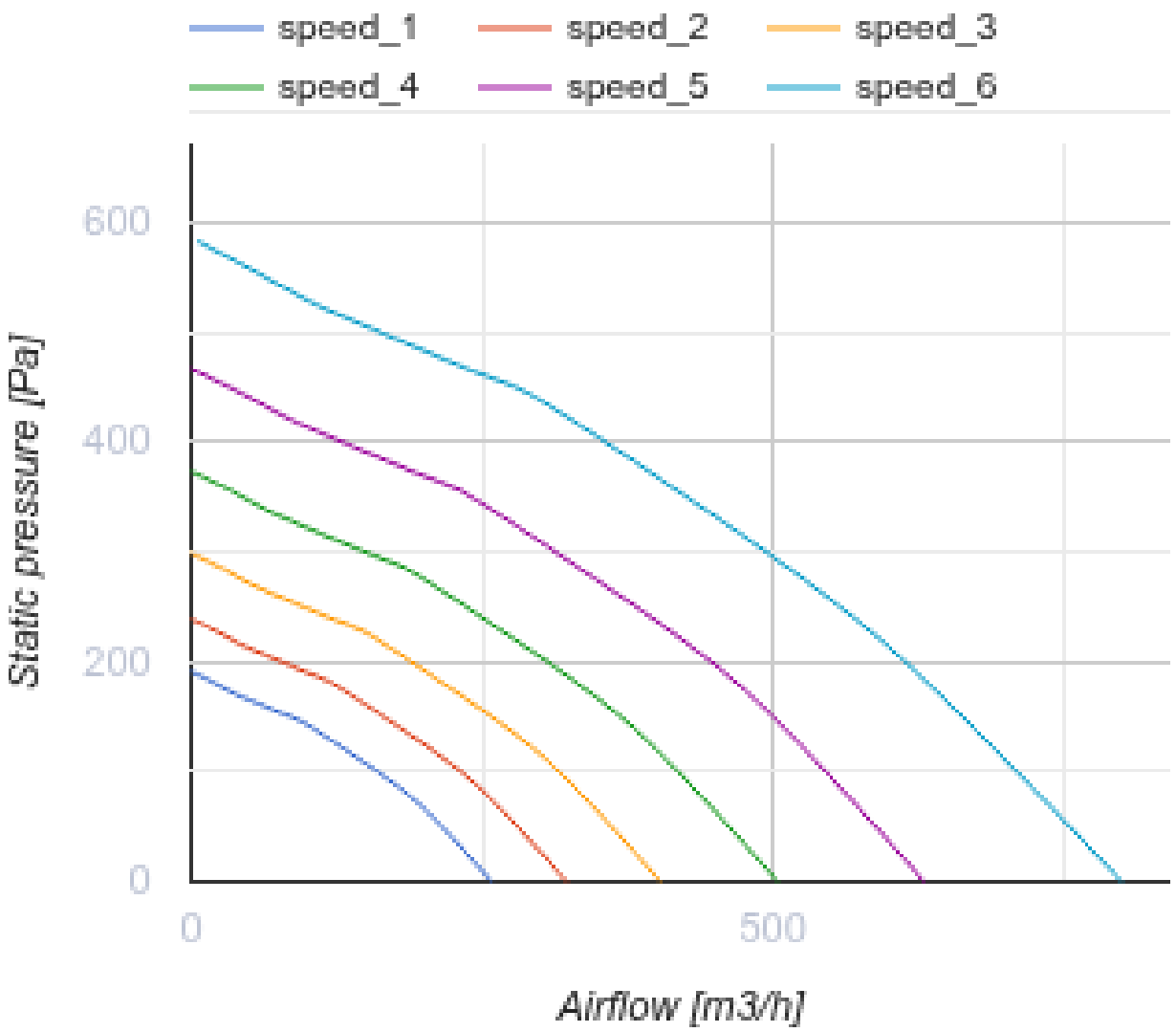
speed_1
speed_2
speed_3
speed_4
speed_5
speed_6
600
400
200
0
Static pressure [Pa]
0
500
Airflow [m3/h]

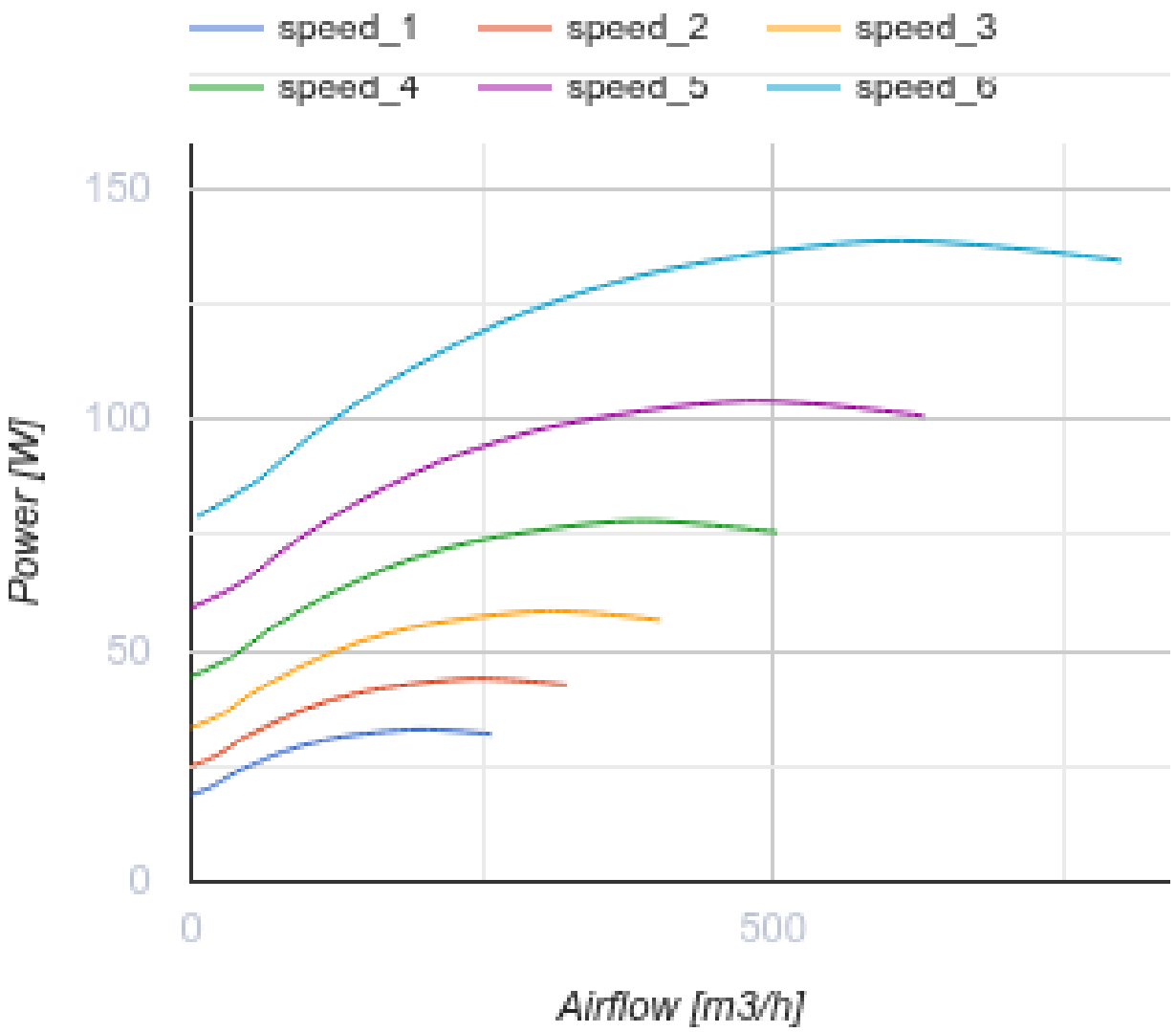

Dimensions

D	H	H1	L	L1	L2	L3	W	W1
250	350	218	850	903	972	65	460	565

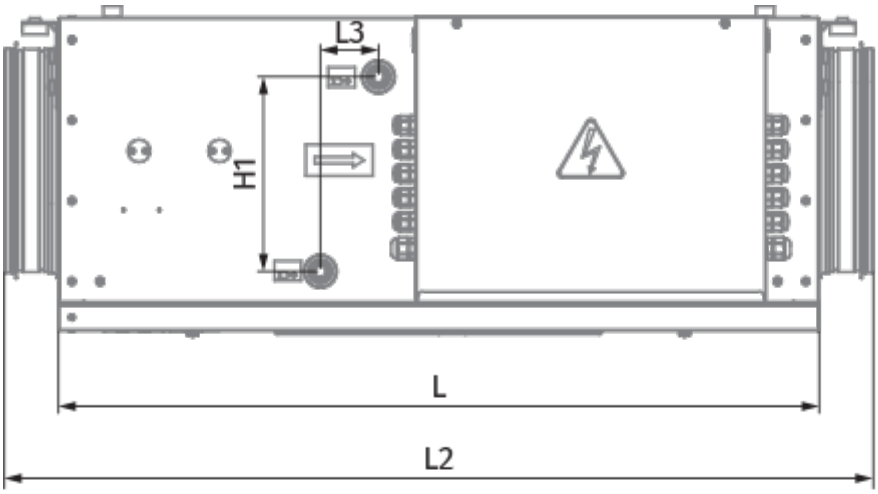
L3
H1
L
L2

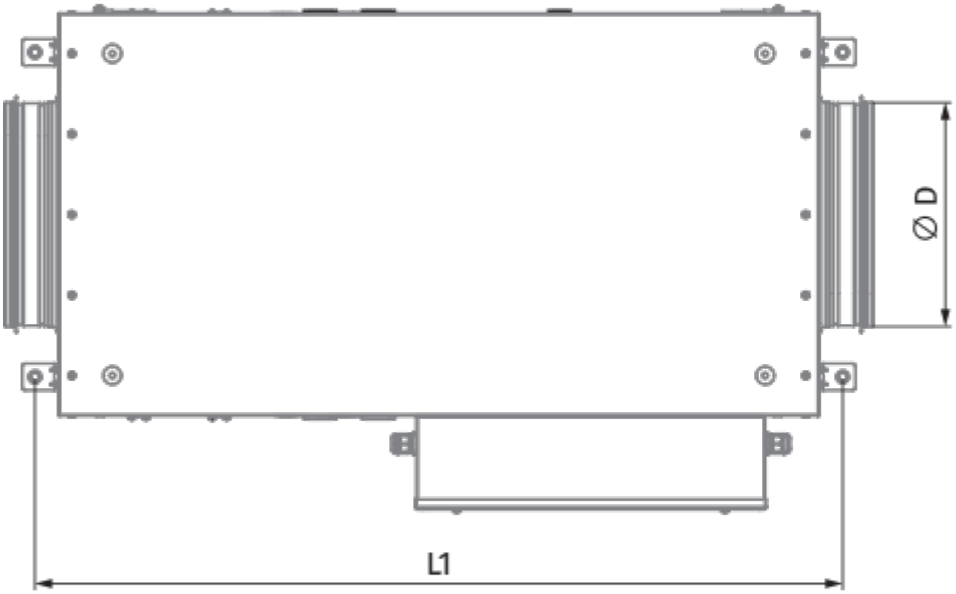
Ø D
L1

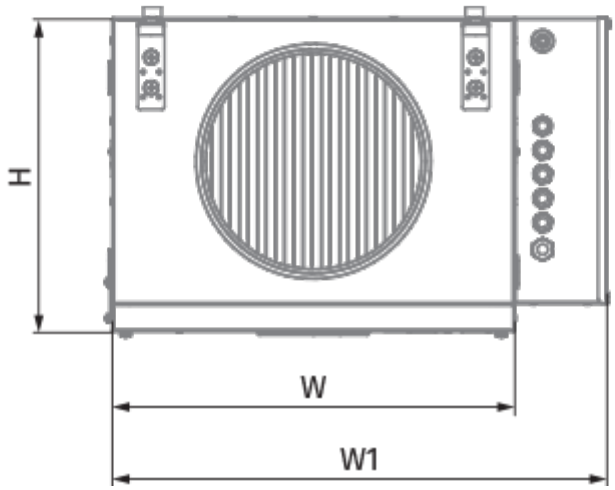
H
W
W1

Ecodesign

Trademark	Blauberg					
Model	Blaubox EC MW 700 S31					
Specific energy consumption (SEC) (kWh/(m²/a))	Cold		Average		Warm	
	-52.6	A+	-25.5	C	-10	F
Type of ventilation unit	Unidirectional					
Type of drive installed	Variable speed					
Type of heat recovery system	None					
Maximum flow rate (m³/h)	700					
Electric power input (W)	136					
Reference flow rate (m³/s)	0.136					
Reference pressure difference (Pa)	50					
Specific power input (SPI) (W/(m³/h))	0.212					
Control typology	Local demand control					
Maximum internal leakage rates (%)	2.7					
Maximum external leakage rates (%)	2.7					
Sound power level (dB(A))	54					
The annual electricity consumption (AEC) (kWh/a)	Cold		Average		Warm	
	112		112		112	
The annual heating saved (AHS) (kWh/a)	Cold		Average		Warm	
	5536		2830		1280	

Accessories

For round ducts

Name	Photo	Description
SD 250/600		Silencers for round ducts
SD 250/900		Silencers for round ducts
SD 250/1200		Silencers for round ducts

For round ducts

Name	Photo	Description
VKA 250		Air dampers for round ducts

For round ducts

Name	Photo	Description
EVA 250	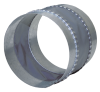	Flexible anti-vibration connectors for round ducts

Other accessories

Name	Photo	Description
FP 384x287x48 ePM1 70% / F7		F7 panel filter
FP 384x287x48 Coarse 90% / G4		G4 panel filter

Electric actuators

Name	Photo	Description
Belimo TF24		Electric actuators
Belimo TF230		Electric actuators