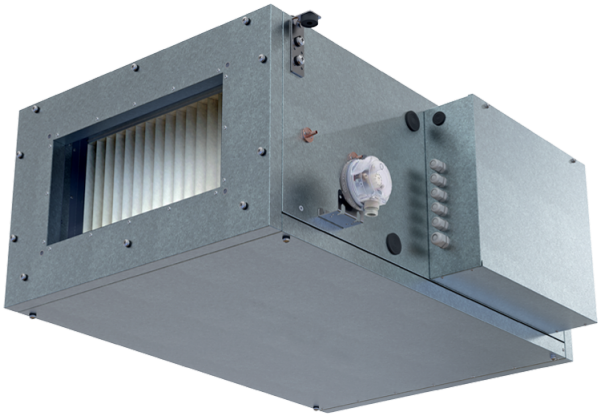

Blaubox EC MW 1500 S31

Supply ventilation units with a water heater

- Sound-insulated casing
- Reheater: Water
- BMS protocol: ModBus
- Control: Wired control panel
- Casing material: Aluzinc steel

	Unit of measurement	Blaubox EC MW 1500 S31
Phases	-	1
Maximum supply voltage	V	230
Minimum supply voltage	V	230
Power supply frequency	Hz	50
Maximum airflow	m³/h	1445
Weight	kg	49
Transported air temperature (max)	°C	40
Transported air temperature (min)	°C	-30
Ingress protection rating	-	IP22
Ingress protection rating of the drive	-	IP44

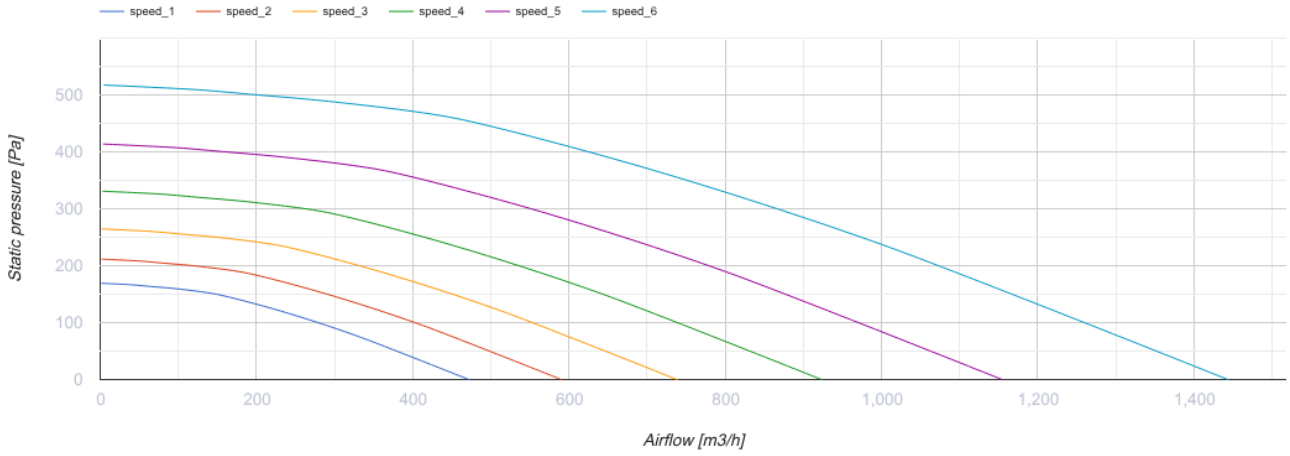

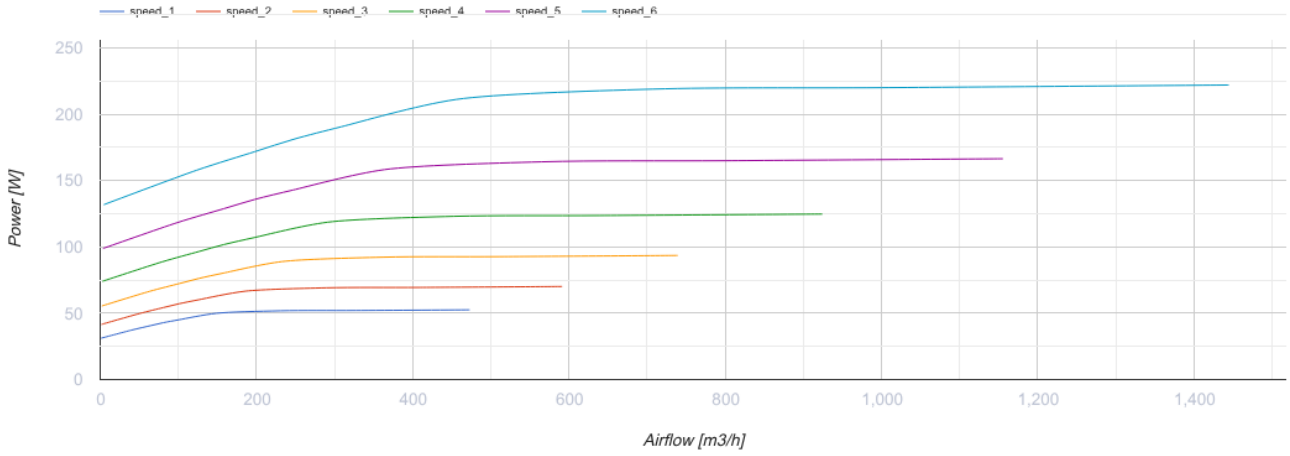

Dimensions

H	H1	H2	L	L1	L2	W	W1	W2	W3
440	250	318	900	770	65	700	754	847	500

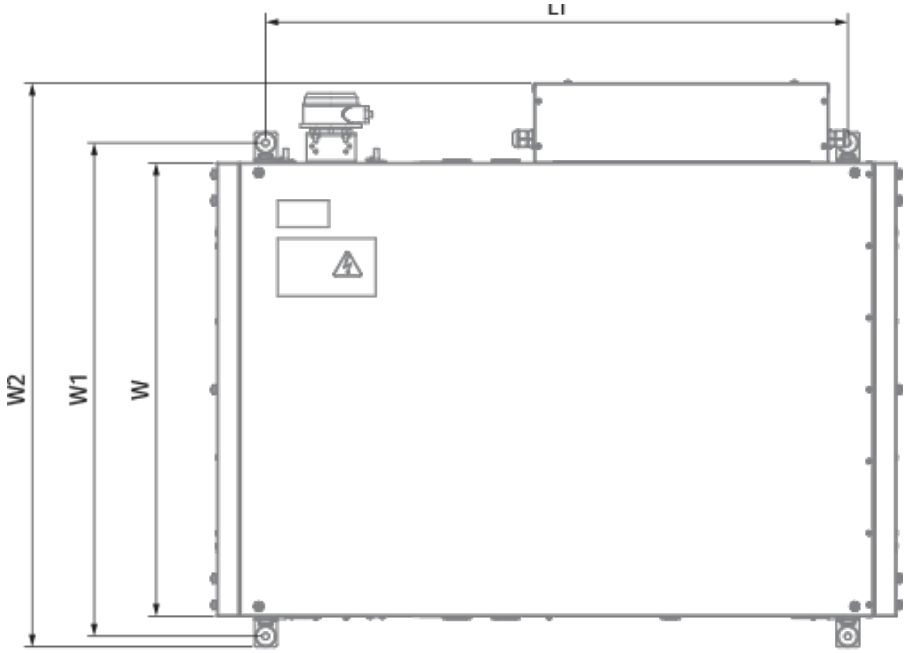
L1
W2
W1
W

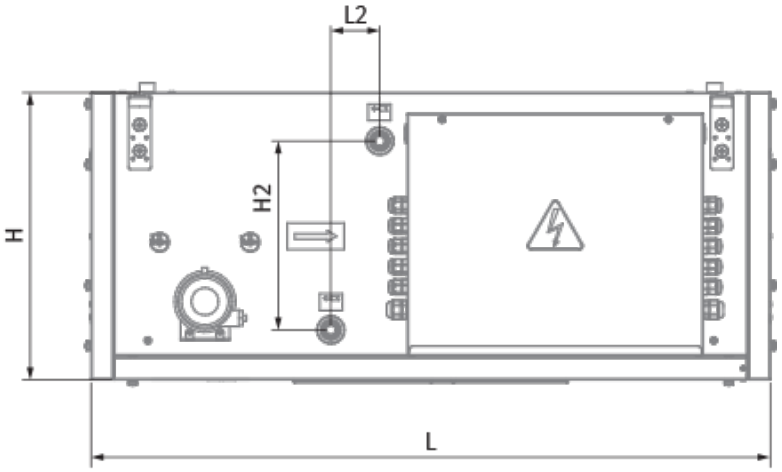
L2
H
H2
L

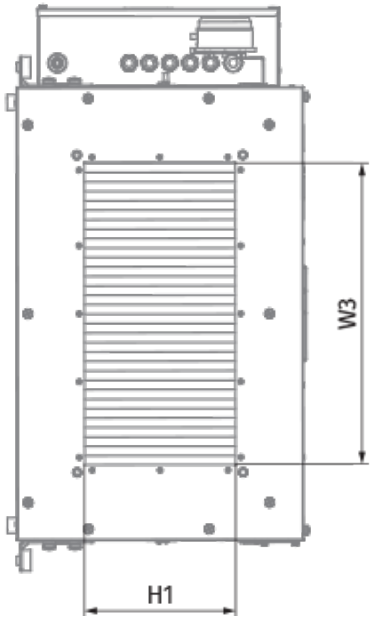
W3
H1

Ecodesign

Trademark	Blauberg
Model	Blaubox EC MW 1500 S31
Type of drive installed	Integrated VSD
Type of heat recovery system	None
Nominal external pressure (Pa)	200
Maximum external leakage rates (%)	4
Static efficiency (%)	42.8
Effective electric power input (kW)	0.165
Face velocity at design flow rate (m/s)	1.267
Sound power level (dB(A))	62
Declared typology	NRVU UVU
Energy performance of filters	B

Accessories

For rectangular ducts

Name	Photo	Description
SD 50x25	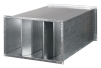	Silencers for rectangular ducts

For rectangular ducts

Name	Photo	Description
EVA 50x25		Flexible anti-vibration connectors for rectangular ducts

Airflow regulators

Name	Photo	Description
SL 50x25		Air dampers for rectangular ducts

Other accessories

Name	Photo	Description
FP 636x376x48 ePM1 70% / F7		F7 panel filter
FP 636x376x48 Coarse 90% / G4		G4 panel filter

Electric actuators

Name	Photo	Description
Belimo TF24		Electric actuators
Belimo TF230		Electric actuators