

BLAUBOX E 800-3.4 Pro

Supply ventilation units

- Power of electrical reheater: 3400
- Sound-insulated casing
- Reheater: Electric
- Control: Remote Control
- Casing material: Galvanized steel

	Unit of measurement	BLAUBOX E 800-3.4 Pro
Phases	-	3
Minimum supply voltage	V	400
Maximum supply voltage	V	400
Power supply frequency	Hz	50
Power of electrical reheater	W	3400
Maximum airflow	m³/h	810
Weight	kg	52
Transported air temperature (max)	°C	55
Transported air temperature (min)	°C	-25
Ambient air temperature max	°C	40
Ingress protection rating	-	IP22
Ingress protection rating of the drive	-	IP44
Ambient air humidity max	%	80

Dimensions

ØD	B	B1	H	L	L1
199	487	526.5	513	835	684

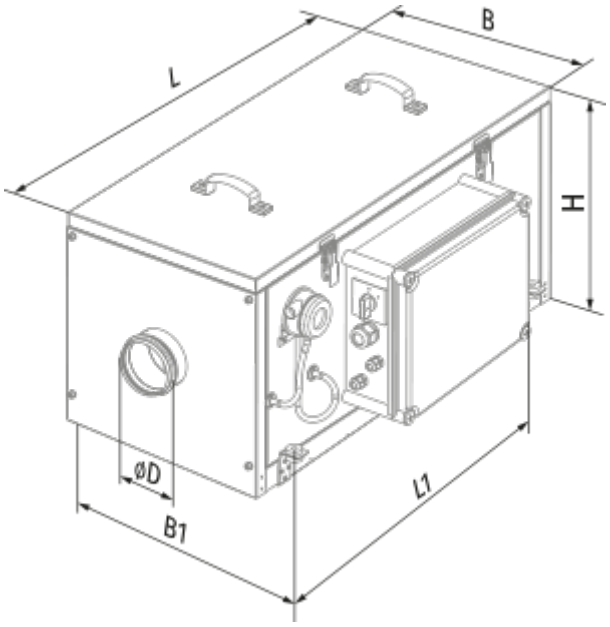

Accessories

For round ducts

Name	Photo	Description
SD 200/600		Silencers for round ducts
SD 200/900		Silencers for round ducts
SD 200/1200		Silencers for round ducts

Other accessories

Name	Photo	Description
FP 439x428x70 G4		G4 panel filter