

BLAUBOX E 400-2.4 Pro

Supply ventilation units

- Power of electrical reheater: 2400
- Sound-insulated casing
- Reheater: Electric
- Control: Remote Control
- Casing material: Galvanized steel

	Unit of measurement	BLAUBOX E 400-2.4 Pro
Phases	-	1
Minimum supply voltage	V	230
Maximum supply voltage	V	230
Power supply frequency	Hz	50
Power of electrical reheater	W	2400
Maximum airflow	m³/h	425
Weight	kg	52
Transported air temperature (max)	°C	55
Transported air temperature (min)	°C	-25
Ambient air temperature max	°C	40
Ingress protection rating	-	IP22
Ingress protection rating of the drive	-	IP44
Ambient air humidity max	%	80

Dimensions

ØD	B	B1	H	L	L1
149	455	496.5	438	800	647

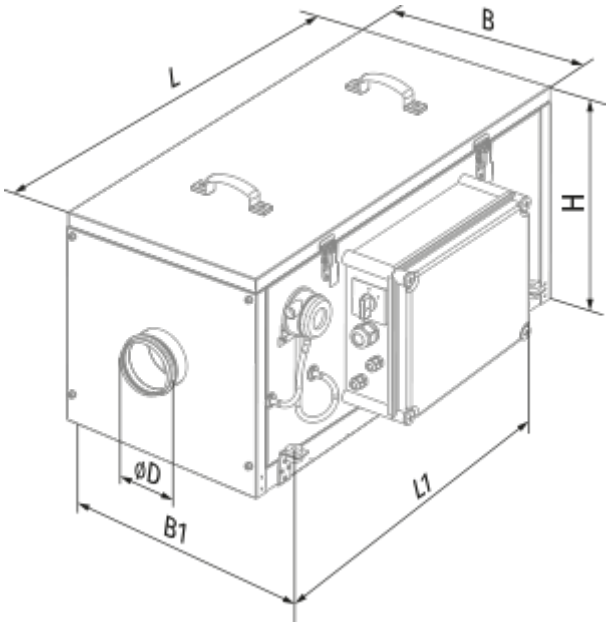

Accessories

For round ducts

Name	Photo	Description
SD 150/600		Silencers for round ducts
SD 150/900		Silencers for round ducts
SD 150/1200		Silencers for round ducts
SDF 150/600		Flexible silencers for round ducts
SDF 150/900		Flexible silencers for round ducts
SDF 150/2000		Flexible silencers for round ducts

For round ducts

Name	Photo	Description
VRV 150		Backdraft dampers with spring for round ducts

VKA 150		Air dampers for round ducts

For round ducts

Name	Photo	Description
EVA 150	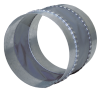	Flexible anti-vibration connectors for round ducts

Other accessories

Name	Photo	Description
FP 397x364x70 G4		G4 panel filter